AMPLIFIER RESEARCH

Operating and Service Manual

MODEL

10S1G4

PART NUMBER

1007390-501

SERIAL NUMBER

19340

AMPLIFIER RESEARCH
Souderton, PA 18964-9990 USA
TEL 215-723-8181 TWX 510-661-6094 FAX 215-723-5688

AMPLIFIER RESEARCH

160 School House Road, Souderton, PA 18964-9990 USA
TEL 215-723-8181 • FAX 215-723-5688

EC Declaration of Conformity

We; Amplifier Research
160 School House Road
Souderton, Pa. 18964

declare that our product;

the Model 10S1G4, 10S1G4M1, 10S1G4M2 RF amplifiers

to which this declaration relates is in compliance with the requirements of the EEC EMC Directive (89/336/EEC) in accordance with the relative standards listed below:

EN 50082-2 : 1995
Electromagnetic compatibility - Generic immunity standard
Part 2: Industrial environment

EN 55011 : 1991
Electromagnetic emmissions requirements for Industrial, Scientific and Medical (ISM) Equipment
Group 1, Class A

The CE marking is affixed on the device according to article 10 of the EC Directive 89/336/EEC.

Donald R. Shepherd

Donald R. Shepherd
President

INSTRUCTIONS FOR SAFE OPERATION

BEFORE APPLYING POWER

Review this manual and become familiar with all safety markings and instructions.

Verify that the equipment line voltage selection is compatible with the main power source.

Protection provided by the equipment may be impaired if used in a manner not specified by Amplifier Research.

SAFETY SYMBOLS

This symbol is marked on the equipment when it is necessary for the user to refer to the manual for important safety information. This symbol is indicated in the Table of Contents to assist in locating pertinent information.

Dangerous voltages are present. Use extreme care.

CAUTION: The caution symbol denotes a potential hazard. Attention must be given to the statement to prevent damage, destruction or harm.

Indicates protective earth terminal.

SAFETY GROUND

This equipment is provided with a protective earth terminal. The main power source to the equipment must supply an uninterrupted safety ground to input wiring terminals, power cord, or supplied power cord set. The equipment **MUST NOT BE USED** if this protection is impaired.

CAUTION:

Adjustment, maintenance, or repair of the equipment must be performed only by qualified personnel.

Hazardous energy may be present while protective covers are removed from the equipment even if disconnected from the power source. Contact may result in personal injury.

Replacement fuses are required to be of specific type and current rating.

TABLE OF CONTENTS

SECTION I: GENERAL INFORMATION

1.1 General Description 1-1
1.2 Power Supplies 1-1
1.3 Specifications 1-1

SECTION II: OPERATING INSTRUCTIONS

2.1 ⚠ General 2-1
2.2 ⚠ Amplifier Operations 2-2

SECTION III: THEORY OF OPERATION

3.1 Introduction 3-1
3.2 Amplifier Section 3-1
3.3 Power Supply 3-3

SECTION IV: MAINTENANCE

4.1 General Maintenance 4-1
4.2 ⚠ Disassembly Procedure 4-1
4.3 Troubleshooting 4-2
4.4 Green Power Indicator LED Doesn't Light 4-3
4.5 Thermal Fault 4-3
4.6 Voltage Fault 4-3
4.7 Low or No RF Power Output 4-4

SECTION V: REPLACEABLE PARTS

5.1 Introduction 5-1
5.2 Ordering Information 5-1
5.3 Non-Listed Parts 5-1
5.4 Circuit Designators 5-1
5.5 Manufacturers' Abbreviation Listing 5-3
5.6 Master List 5-3
5.7 Schematics and Bills of Material 5-3

SECTION VI: RECOMMENDED SPARE PARTS

6.1 Level of Maintenance 6-1

WARRANTIES: LIMITATION OF LIABILITIES

SECTION I

GENERAL INFORMATION

1.1 GENERAL DESCRIPTION

The Model 10S1G4 is a self-contained, broadband Amplifier designed for laboratory applications where instantaneous bandwidth, high gain and moderate power output are required. A gain control, located on the front panel, can be used to decrease the amplifier gain by 10dB or more. Solid state technology is used exclusively to offer significant advantages in reliability and cost. A Model 10S1G4, used with a frequency swept signal source, will provide 10 watts of swept power output from 0.8 to 4.2GHz. Typical applications include antenna and component testing, wattmeter calibration, EMI susceptibility testing, use as a driver for frequency multipliers and high power amplifiers.

1.2 POWER SUPPLIES

The 10S1G4 contains a switching Power Supply. The input voltage range to the supply is 90-132 or 180-264 VAC, 50/60Hz, selected automatically. The operator does not have to switch or change anything on the 10S1G4 when changing the AC input voltage. The AC power consumption is 250 watts nominal. Primary AC circuit fusing is provided.

1.3 SPECIFICATIONS

Refer to the "Amplifier Research Data Sheet" on the following page for detailed specifications.

AMPLIFIER RESEARCH
160 School House Road, Souderton, PA 18964-9990 USA
TEL 215-723-8181 • FAX 215-723-5688

MODEL 10S1G4
10WATTS CW
0.8 -4.2 GHz

The Model 10S1G4 is a solid state, self-contained, air-cooled, broadband amplifier designed for applications where instantaneous bandwidth and high gain are required. Housed in a stylish contemporary cabinet, the unit is designed for benchtop use, but can be removed from the cabinet for immediate equipment rack mounting. The 10S1G4, when used with a sweep generator, will provide a minimum of 10 watts of RF power. Included is a front panel gain control which permits the operator to conveniently set the desired output level. The 10S1G4 is protected from RF input overdrive by an RF input leveling circuit which controls the RF input level to the RF amplifier first stage when the RF input level is increased above 0 dBm. The RF amplifier stages are protected from over temperature by removing the DC voltage to them if an over temperature condition occurs due to cooling blockage or fan failure. There is a fault lamp on the rear panel to indicate an over temperature or power supply fault condition. The unit can be returned to operate when the condition has been cleared.

10S1G4 TYPICAL POWER OUTPUT

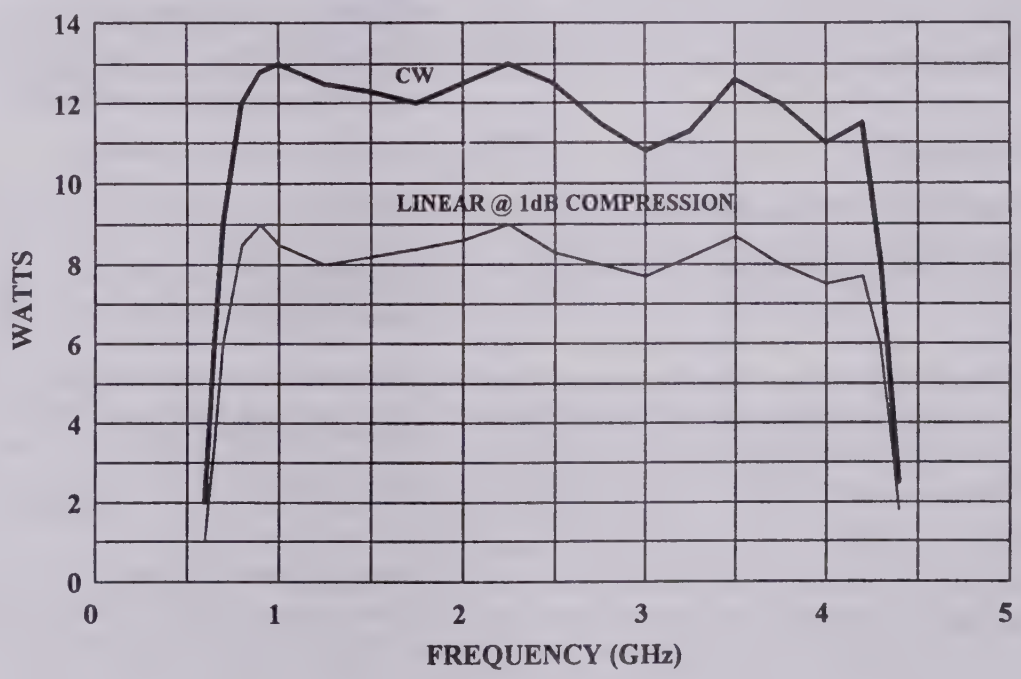

REV112195

SPECIFICATIONS
Model 10S1G4

POWER OUTPUT, CW	
Minimum	*10 watts*
Linear @ 1dB Compression	*7 watts minimum*
FLATNESS	*±1.5 dB typical* *±2.0 dB maximum*
FREQUENCY RESPONSE	*0.8 –4.2 GHz instantaneously*
INPUT FOR RATED OUTPUT	*1.0 milliwatt maximum*
GAIN (at maximum setting)	*40 dB minimum*
GAIN ADJUSTMENT (Continuous Range)	*10 dB minimum*
INPUT IMPEDANCE	*50 ohms, VSWR 2.0:1 maximum*
OUTPUT IMPEDANCE	*50 ohms, nominal*
*MISMATCH TOLERANCE**	*100% of rated power without foldback. Will operate without damage or oscillation with any magnitude and phase of source and load impedance.*
MODULATION CAPABILITY	*Will faithfully reproduce AM, FM, or pulse modulation appearing on the input signal*
HARMONIC DISTORTION	*Minus 20 dBc maximum at 8 watts*
THIRD ORDER INTERCEPT POINT	*48 dBm typical*
PRIMARY POWER (Selected Automatically)	*90-132, 180-264 VAC* *50/60 Hz, single phase* *250 watts maximum*
CONNECTORS	*Type N female*
COOLING	*Forced air (self contained fans)*
WEIGHT	*28.2 kg (62 lbs)*
SIZE (WxHxD))	*50.3 x 20.3 x 45.7 cm* *19.8 x 8.0 x 18.0 in*

** See Application Note #27*

SECTION II

OPERATING INSTRUCTIONS

2.1 GENERAL

Operation of the Model 10S1G4 broadband amplifier is simple. The input signal, whether swept or fixed in frequency, is fed into the jack marked ***"INPUT"*** and the amplifier output signal is taken from the jack labeled ***"OUTPUT"***. The unit is turned ON by activating the power switch. In the event of a unit malfunction, protection is provided by fusing located in the AC input receptacle. A polarized, three (3) wire AC power cord is also included with the unit to provide cabinet and chassis grounding to the power mains.

⚠ CAUTION:

THE MODEL 10S1G4 AMPLIFIER IS NOT CRITICAL IN REGARDS TO SOURCE AND LOAD VSWR AND WILL REMAIN UNCONDITIONALLY STABLE WITH ANY MAGNITUDE AND PHASE OF SOURCE AND LOAD VSWR. IT ALSO HAS BEEN DESIGNED TO WITHSTAND, WITHOUT DAMAGE, RF INPUT POWER UP TO TWENTY (20) TIMES ITS RATED INPUT OF 1mW. HOWEVER, SIGNAL LEVELS HIGHER THAN 20mW OR TRANSIENTS WITH HIGH PEAK VOLTAGES CAN DAMAGE THE AMPLIFIER. ALSO, ACCIDENTAL CONNECTION OF THE 10S1G4 OUTPUT TO THE INPUT CAUSES OSCILLATIONS WHICH WILL PERMANENTLY DAMAGE THE INPUT CIRCUITRY.

NOTE:

ALTHOUGH DESIGNED FOR OVERDRIVE AND LOAD TOLERANCE DESCRIBED ABOVE, SUBJECTING THE AMPLIFIER TO THESE CONDITIONS SIMULTANEOUSLY CAN CAUSE FAILURE OF THE OUTPUT TRANSISTOR. REPEATED FAILURES OF THIS NATURE WILL NOT BE COVERED UNDER WARRANTY.

The 10S1G4 Amplifier is protected from input overdrive by an automatic level control circuit which will limit the maximum RF level to the first gain stage (Q1) of the RF Amplifier to approximately 0dBm. The 10S1G4 RF power transistors are protected from over temperature, by sensing the heat sink temperature near the RF output transistors. In the event of a cooling fan failure or an air flow blockage the DC voltage will be removed from the RF stages, when the heat sink temperature reaches approximately 70°C.

The operate LED, located on the front panel will change in color from Green (normal) to Red (fault) and the temperature fault LED located on the rear panel will light when the heat sink temperature is above 70°C. Normal operation can be resumed after the heat sink temperature drops below 70° C by resetting the 10S1G4.

2.2 AMPLIFIER OPERATION

Figure 2-1 shows the Model 10S1G4 Amplifier in pictorial form.

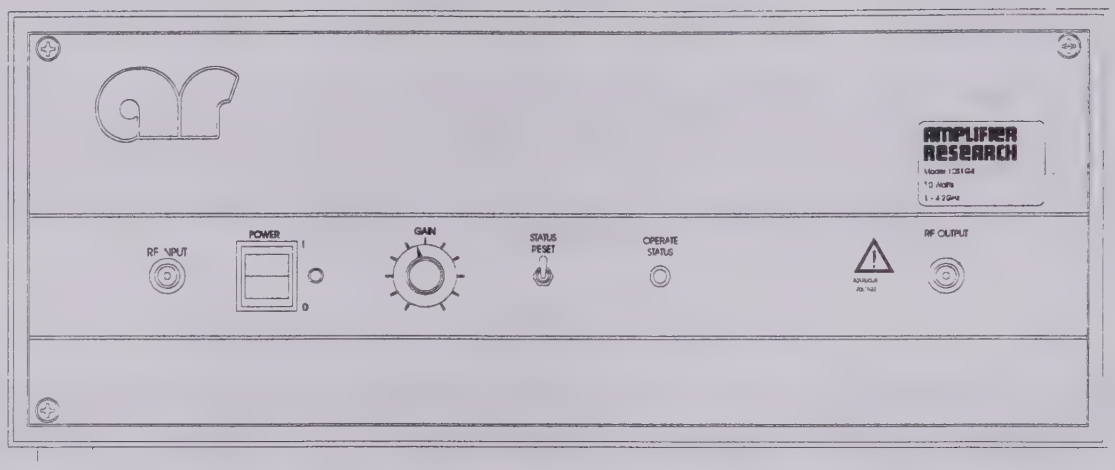

Turn On Sequence:

1. Connect input signal to "INPUT" connector. The input signal level should be 0dBm maximum.

2. Connect load to "OUTPUT" connector.

3. Activate power switch to ON (1) position. A green indicator light located next to the power switch will light when power is applied.

SECTION III

THEORY OF OPERATION

3.1 INTRODUCTION

The Model 10S1G4 RF amplifier consists of a 0.8-4.2GHz RF amplifier located on the heat sink and a Power Supply/Fault circuit on a chassis assembly located on a chassis opposite the heat sink. The RF assembly is accessible thru the top of the unit, the Power Supply and Fault Detect are accessible thru the bottom of the unit.

The RF section consists of a variable gain amplifier, a splitter/detector, a linearizer/control circuit, a one (1) watt amplifier, a bias control circuit, a driver stage, two 5 watt stages and a 8-way combiner.

The Power Supply section consists of an AC input filter with fusing, AC Power Switch, a plus and minus 24V power Supply and a Regulator/Fault detect circuit.

3.2 RF AMPLIFIER OPERATION

3.2.1 A1 Variable Gain Amp (Schematic No. 1007453 Part of Schematic 1007691)

The RF input signal is fed to the variable gain amplifier RF attenuator U1. U1 is a GaAs FET attenuator. DC signals between approximately 0.5 to -2.0V are used to control the shunt and series legs of the attenuator. This attenuator is used for manual gain control using the Front Panel Gain Control and to attenuate RF input signals above 0dBm, using internal voltages.

LC networks C2, L1, C3 and L2 form high pass filters used to attenuate low frequency signals.

Transistor Q1 is a GaAs FET transistor and is the first stage of gain in the amplifier. Transistor A3Q1 in the A3 Linearizer Control Circuit controls the drain current thru FET Q1. The output of the A1 is fed to the input of the A2 Splitter Detector.

3.2.2 A2 Splitter/Detector (Schematic 1007405 Part of Schematic 1007691)

The A2 Splitter Detector splits the signal into two paths using a 90° quadrature hybrid. The coupled output of the A2 is fed to the input of the A4 1 watt module.

The thru path of the 90° coupler is fed to a detector which is terminated in 50Ω. The detected output is fed to the A3 Linearizer Control Circuit.

3.2.3 A3 Linearizer Control Circuit (Schematic 1007392 Part of Schematic 1007691)

I.C. U1A provides a DC signal to the series element of the A1U1 attenuator. The A1U1 has minimum attenuation when the control signal is at approximately -12.5VDC with maximum attenuation (minimum gain) occurring with 0VDC on the control input.

3.2.3 A3 Linearizer Control Circuit (Continued)

NPN transistors Q2, Q3 and Q4 are used to provide break points in the series control voltage to the A1U1 RF attenuator, providing a more linear gain control/attenuation characteristic. I.C. U1B maintains the output impedance of the A1U1 RF attenuation near 50 ohms. U1B is a comparator, a reference voltage is developed across a 56 ohm (R22) resistor connected to the non-inverting input. The inverting input is connected to the output of the RF attenuator A1U1 thru A1L2. If the DC voltage at the output of the attenuator goes more negative, the output from the comparator will go more positive, decreasing the output impedance of the A1U1 attenuator, maintaining the correct output impedance.

PNP transistor Q1 is used to control the drain current of GaAs FET A1Q1 by varying the A1Q1 gate voltage. A reference voltage is provided at the base of Q1 by voltage dividers R25 and R26. The drain current of the RF FET (A1Q1) flows thru R27 (220Ω 1 watt). PNP transistor Q1 varies the gate voltage to the RF FET A1Q1 to maintain the correct drain current.

I.C. U2A amplifiers the detected signal from A2CR1. I.C. U2B is a comparator, its normal output is approximately -12.5 VDC. When the RF input signal to the A1 variable gain amplifier is increased above approximately 1mw (0dBm), the voltage output from U2B will become less negative. This voltage is fed to the gain control on the front panel of the amplifier. The wiper of the gain control is connected to the control input of U1A of the Linearizer/Control Circuit. The amplifier has maximum gain at approximately -12.5 VDC control input. Minimum gain occurs at 0 VDC. The attenuation of A1U1 will increase as the output of A3U2B varies from -12.5V toward 0 volts. This will help to protect the unit in the event of input overdrive.

3.2.4 A4 One (1) Watt Amplifier (Schematic 1007535 Part of Schematic 1007692)

The one (1) watt amplifier is assembled on a teflon/glass P.C. board using microstrip techniques. The one (1) watt amp has four (4) GaAs FET gain stages. Each stage is input and output DC isolated from the other stage with coupling capacitors. Resistive feedback is used from the drain to the gate of the GaAs FET to decrease the low frequency gain. Shunt capacitive stubs are used to tune the amplifier. The drain of Q4 is matched to the output using a tapered transformer.

The GaAs FET transistors are operated in a depletion mode. They will conduct the maximum DC current with 0VDC bias on their gates and are normally operated with between approximately -1 to -4 VDC on their gates.

3.2.5 A5 Bias Control (Schematic 1007503 Part of Schematic 1007692)

The bias control circuit controls the DC drain current of the four (4) FET stages in the A4 one (1) watt amplifier by varying the gate voltage of the RF stages.

The bias control has a -5 VDC input and a +20 VDC input from the power supply.

All of the bias control stages operate in a similar manner therefore only the operation of Q4 will be described.

3.2.5 A5 Bias Control (Continued)

PNP transistor Q4 (2N3906) is used to control the DC current thru A4Q4 FET in the one (1) watt amplifier. A reference voltage of 8.2 VDC is established on the base of Q4 with the voltage divider network R7 (4.7K) and R12 (3.3K). There is a 25Ω resistor from the 20VDC line to the emitter if Q4 and also to the drain of A4Q4 in the one (1) watt amplifier. Q4 will operate normally with approximately 8.8V on the emitter, this will occur with approximately 440ma thru the 25Ω resistor R8. If the current thru A4Q4 decreases the drop across R8 will decrease increasing the emitter voltage of Q4, this will cause Q4 to conduct more which will cause the gate voltage of A4Q4 to go more positive, which will cause A4Q4 to conduct more returning the voltage at the emitter of Q4 to 8.8V.

3.2.6 A6 Driver Amplifier (Schematic 1007369 and 1007547)

The A1 two way splitter splits the RF input signal into two equal amplitude signals which are fed to RF stages A2 and A3. The two RF stages (Schematic Number 1007547) each have a GaAs FET Q2 which amplifies the RF signal and a bias transistor (Q1) which varies the gate voltage to Q2 maintaining the current drain current thru Q2. The outputs from A2 and A3 are connected to J2 and J3, each one will drive a 5 watt output stage.

3.2.7 A7 and A8 5 Watt Amplifier (Schematic 1007407 and 1007881)

The A1 four way splitter splits the RF input signal into four equal amplitude signals which are amplified by the four RF stages A3, A4, A5 and A6. The four RF stages each have a GaAs FET (Q2) which amplifiers the RF signal and a bias transistor (Q1) which varies the gate voltage to Q2 maintaining the current drain current thru Q2. The four outputs from the A7 and A8 amplifiers are connected to the 8-way power combiner (A9).

3.3 Power Supply (Schematic 1007414)

3.3.1

Power supply PS1 supplies +24VDC and -24VDC to the A10 Regulator/Fault board. PS1 is a switching regulator with auto-ranging to select the correct connections for the line voltage in use either the 90-132 or the 180-264 VAC input ranges, 50 to 60Hz.

3.3.2 A10 Regulator/Fault Board (Schematic 1007737)

I.C. U1 is a variable voltage regulator normally set to 20 VDC output voltage. This regulator supplies drain current to the one (1) watt and 5 watt amplifiers. Transistor Q2 is used to inhibit the output of U1 if either the negative 5V is absent or there is an over temperature condition on the RF heat sink. U1 is turned off when Q2 is conducting. Transistor Q1 is a boost transistor which supplies load current from the 20V supply in excess of aprox. 1.5 amps.

I.C. U2 is a 15V fixed regulator which supplies voltage to power the logic, on the Regulator/Fault board, and also the Linearizer/Control Circuit.

3.3.2 A10 Regulator/Fault Board (Continued)

I.C. U6 is a fixed negative 5 volt regulator. The negative 5 volts is used to bias the RF GaAs FET's in the one (1) watt amplifier, the driver amp and the output amplifiers.

I.C. U7 is a fixed negative 15V regulator. The negative 15V is used in the Linearizer/Control Circuit.

I.C. U5 is used as a voltage comparator. It will provide a high signal if the output of the negative 5 volt supply is low or absent.

I.C. U3A, B and D form a latch and hold circuit used to sense a Thermal Fault on the RF heat sink. A Thermal Fault will cause the 20V supply to turn off, and will light the Red Thermal LED on the rear panel and cause the operate status lamp to turn from Green to Red. This circuit can be reset when the Thermal fault has been cleared.

I.C. U4 A, B and D form a latch and hold circuit which will hold a 5 volt supply fault, causing the 20 V supply to turn off, lighting the Red Voltage Fault LED on the rear panel, and cause the Operate status LED to turn from Green to Red. The latch and hold circuit can be reset if the negative 5 volt fault is corrected.
Transistor Q3 turns on momentarily resetting the latch and hold circuits at unit power up.

SECTION IV

MAINTENANCE

4.1 GENERAL MAINTENANCE INFORMATION

The Model 10S1G4 should require very little maintenance since it is a relatively simple instrument. It is built with etched circuit wiring and solid state devices which should ensure long, trouble free life. However, should trouble occur special care must be taken in servicing to avoid damage to the devices or the etched circuit board.

Since the components are soldered in place, substitution of components should not be resorted to unless there is some indication that they are faulty. In addition, take care when troubleshooting, not to short voltages across the amplifier. Small bias changes may ruin the amplifier due to excessive dissipation or transients.

Components in Amplifier Research instruments are conservatively operated to provide maximum instrument reliability. In spite of this, parts within an instrument may fail. Usually, the instrument must be immediately repaired with a minimum of *"down time"*. A systematic approach can greatly simplify and thereby speed up the repair.

However, due to the importance of the amplifier's alignment, it is recommended that when failure is caused by breakdown of any of the components in the signal circuits, the amplifier be returned to the factory for part replacement and amplifier realignment. Shipping instructions are as follows.

Ship PREPAID via United Parcel Service to:

Amplifier Research Corporation
160 School House Road
Souderton, Pa. 18964

4.2 DISASSEMBLY PROCEDURE

⚠ **CAUTION:**

EXTREME CAUTION SHOULD BE EXERCISED WHEN TROUBLESHOOTING THIS UNIT. PARTICULARLY WHEN MEASURING VOLTAGES IN THE POWER SUPPLY SECTION OF THE UNIT AS HAZARDOUS VOLTAGES DO EXIST IN THE UNIT WHICH COULD CAUSE SERIOUS INJURY TO ANY PERSONNEL PERFORMING THE MEASUREMENTS.

The amplifier can be removed from the housing by removing 4 screws from the front panel and 4 screws from the back panel. The amplifier can then be slid from the housing. The top cover can be removed to gain access to the RF assemblies. The bottom cover can be removed to gain access to the power supplies.

4.3 TROUBLESHOOTING

CAUTION

THE RF TRANSISTORS USED IN THE 10S1G4 AMPLIFIER ARE GaAs FET'S. THESE DEVICES ARE VERY RELIABLE WHEN INSTALLED IN A SUITABLE CIRCUIT BUT CAN BE EASILY DAMAGED WITH IMPROPER TROUBLESHOOTING OR HANDLING TECHNIQUES. THE GATE JUNCTIONS OF THE GaAs FET'S HAVE A HIGH INPUT IMPEDANCE AND ARE SUSCEPTIBLE TO STATIC DAMAGE OR DAMAGE DUE TO AN UNGROUNDED SOLDERING IRON. DO NOT TRY TO CHECK FET'S WITH AN OHMMETER. USE CAUTION WHEN TROUBLESHOOTING, DO NOT SHORT THE GATE TO GROUND OR TO THE DRAINS.

CAUTION

USE CARE WHEN UNPACKING NEW FET'S. THE FET PACKAGING SHOULD ONLY BE OPENED AT STATIC APPROVED WORK STATIONS, BY INDIVIDUALS FAMILIAR WITH THE HANDLING OF STATIC SENSITIVE RF GaAs FET'S.

Troubleshooting the 10S1G4 in a logical manner can speed the solution to a problem. The settings of pots, capacitors or other variables should not be disturbed until other problems have been eliminated. Many problems can be solved by comparing the measured DC voltage to those shown on the schematics. Before measuring circuit voltages, first verify that the voltage to the circuits are correct.

10S1G4 Troubleshooting Categories

Paragraph 4.4 Power Indicator LED Doesn't Light
Paragraph 4.5 Thermal Fault
Paragraph 4.6 Voltage Fault
Paragraph 4.7 Fault Indications Normal - Low or No RF Power Output

4.4 Green Power Indicator LED Doesn't Light

Refer to Schematic Number 1007414

4.4.1 If the cooling fans are running the power on indicator LED is defective or there is a wiring problem.

4.4.2 If the fans are not running, check to see that the 10S1G4 is plugged into a live outlet. Check the line cord, is the line cord plugged into the 10S1G4 completely ?

4.4.3 Check the AC fuse located in the AC receptacle on the rear panel.

4.4.4 Check the output voltage from PS1, it should be 24 VDC

4.4 Green Power Indicator LED Doesn't Light (Continued)

No output, check:

(1) Check the AC input to PS1. The AC input should be equal to the AC Line Voltage. If there isn't any AC input, the power switch could be defective or there could be an open in the wiring or other component.

(2)Remove the output connector from PS1, recheck the D.C. output voltage , if voltage is present without load, there may be a short on the output of PS1

4.5 Thermal Fault

The Operate Status LED on the front panel is Red and the Thermal Fault LED on the rear panel is lit. Try to reset the 10S1G4. If the unit doe not reset check:

4.5.1 Check for blockage of the air inlets on the bottom of the unit.

4.5.2 Check for blockage of the air outlets on the rear of the unit.

4.5.3 Are the fans running? There should be air flow from the rear panel.

4.5.4 If the above are okay and the unit is not overheated, check the Thermal switch on the RF heat sink. The Thermal switch should be closed below 70°C.

4.5.5 Check for continuity from J1 Pin 5 on the Regulator/Fault board to GND, if okay, check the Thermal Fault circuit on the Regulator/Fault board.

4.6 Voltage Fault

The Operate Status LED on the front panel is Red and the Voltage Fault LED on the rear panel is lit. Try to reset the 10S1G4. If the unit does not reset check:

4.6.1 Check for -5V on TP3 (Pin J2-8) of the Regulator/Fault board.

4.6.2 If the -5V output is normal, check the operation of the voltage comparator (I.C. U5) and the latch and hold circuit (I.C. U4A, Band C) on the Regulator/Fault board.

4.6.3 If the -5V and the -15V are both low, check the operation of the -24V supply PS2.

4.6.4 If the -15V is okay but the -5V is low, check the -5V line for shorts to GND and the -5V regulator (I.C. U6) for proper operation.

4.7 Low or No RF power output

All indicators on the 10S1G4 are normal the power indicator is lit and the Operate Status is lit Green.

4.7.1 Check the position of the RF gain control.

4.7.2 Check the RF input power to the 10S1G4, is it the correct frequency range and amplitude.

4.7.3 Check the RF output connections, is it correctly connected to the load? Is the coax cable defective?

4.7.4 Check the following voltages on the Regulator/Fault board. If any of the voltages are out of tolerance, correct the problem before further troubleshooting.

TP1	+20V	±0.5V
TP2	+15V	±0.4V
TP3	-5V	±0.2V
TP4	-15V	±0.4V

4.7.5 If the voltages in Paragraph 4.7.4 are correct, check the voltage to the Linearizer/Control Circuit (A1A3). Troubleshoot any incorrect voltages

J1 Pin 4-15V	±0.4V
J1 Pin 5+15V	±0.4V
J1 Pin 6-12.5V	±1.5V (Gain control at maximum gain. Input signal less than -5dBm)

4.7.6 Check the voltage supplied to the A1A5 Bias Control Circuit. Troubleshoot any incorrect voltage.

J1 Pin 1-5V	±0.2V
J1 Pin 3+20V	±0.5V

4.7.7 Check the voltage on the feedthru caps of the A4 one (1) watt amplifier. Troubleshoot any incorrect voltage.

C1, C3, C5 C7	-0.7V to -3.5V	
C2	-5.1V	±0.5V
C4	+8.2V	±0.5V
C6	+8.6	±0.5V
C8	+9.0V	±0.5V

4.7.8 Check the voltage on the feedthru caps of the A1A1 variable gain amplifier with the RF gain control at maximum gain. Troubleshoot any incorrect voltages.

C12	-0.7V to -3.5V	
C13	+4.3V	±0.5V
C11	-0.1V	
C10	-1.5V	±0.5V
C9	-4.0V	±1.0V

4.7 Low or no RF power output (Continued)

4.7.9 Check the DC voltage on the feed thru caps of the A6 driver amplifier.

C1 and C3	-5.0V
C2 and C4	+20.0V

4.7.10 Check the voltage on the drains of the A6 RF stages A2 and A3 at the junctions of C5 and R3. The voltage should be 8.8 ± 0.5V.

4.7.11 Check the voltage on the gate of the A6 RF stages A2 and A3 at the junction of R4 and R5. The voltage should be -0.7V to -3.5V.

4.7.12 Check the DC voltage on the feed thru caps of the A7 and A8 output amplifier.

C1 and C3	-5.0V
C2 and C4	+20.0V

4.7.13 Check the voltage on the drains of the A7 and A8 RF stages A2 and A3 at the junctions of C5 and R3. The voltage should be 8.8 ± 0.5V.

4.7.14 Check the voltage on the gate of the A7 and A8 RF stages A2 and A3 at the junction of R4 and R5. The voltage should be -0.7V to -3.5V.

4.7.15 If the overall gain is low the gain of the individual stages can be checked/ the gain from the RF input of the A2 Splitter/detector output should be 3dB or more.

4.7.16 The gain of the A4 1 watt Amplifier should be 30dB or more.

4.7.17 The gain of the A6 driver amplifier should be approximately 2 to 3dB from the input to each of the outputs, with the other output terminated in 50 ohms.

4.7.18 The gain of the A7 and A8 output amplifier should be approximately 2 to 3dB from the input to each of the four outputs with the other outputs terminated in 50 ohms.

SECTION V

REPLACEABLE PARTS

5.1 INTRODUCTION

This section contains information for ordering replacement parts. Information is provided for obtaining parts through Amplifier Research and or from the manufacturer of the part. Included in this section are the following:

Ordering Information
Nonlisted Parts
Circuit Designators
Manufacturer's Abbreviation Listing
Master List
Schematics and Bills of Material

5.2 Ordering Information

To obtain replacement parts, address order to Amplifier Research, 160 School House Road, Souderton, PA 18960 USA. Identify and include instrument model and serial numbers.

TEL: 215-723-8181
TWX: 510-661-6094
FAX: 215-723-5688

5.3 Nonlisted Parts

To obtain a part that is not listed, include:

a. Instrument Model Number
b. Instrument Serial Number
c. Description of the Part
d. Function and Location of the Part

5.4 Circuit Designators

REF	=	Reference Document
A	=	Assembly
B	=	Fan
BT	=	Battery
C	=	Capacitor
CB	=	Circuit Breaker

5.4 Circuit Designators (Continued)

CR	=	Diode
DL	=	Delay Lamp
DS	=	Lamp
E	=	Terminal
F	=	Fuse
FL	=	Filter
J	=	Connector, Recept
K	=	Relay
L	=	Inductor
M	=	Meter
P	=	Connector, Plug
Q	=	Transistor, Semiconductor
R	=	Resistor, Potentiometer
RT	=	Temperature Sensing Element
S	=	Switch
T	=	Transformer
TB	=	Terminal Block
TP	=	Test Point
U	=	Integrated Circuit
V	=	Vacuum Tube, Neon Bulb, Photocell, ect.
VR	=	Zener Diode
W	=	Wire, Cable
X	=	Socket
Y	=	Crystal Unit

5.5 Manufacturer's Abbreviation Listing

This section contains a list of manufacturer's abbreviations. These abbreviations appear under the drawing number column on the bills of material. The three letters or symbols before the backward slash represent the name of the manufacturer. The number after the backward slash represents the manufacturer's part number. See Appendix A for complete listing of manufacturer's abbreviations.

5.6 Master List

The master list provides the user with a quick view of the major assemblies of the unit. The assemblies are displayed in an indented format with the corresponding schematic shown in the right column.

5.7 Schematics and Bills of Material

The schematics and bills of material are arranged in sequence according to the master list. The schematic which appears first on the master list also appears first in the schematic and bill of material section. Following each schematic are the appropriate bills of material relating to the schematic. This pattern will be repeated throughout this section.

The bills of material used in this manual are computer generated. Each computer part number appears only once on a bill of material along with the total quantity used, and all of the applicable circuit designators. The bills of material are designed to organize the parts in alphanumeric order of their circuit designators. Typical manufacturer part numbers can be found in the drawing number column. The manufacturer's abbreviation appears first, separated by a backward slash, which is followed by the part number.

Amplifier Research has assigned computer product numbers to all parts in inventory. The computer product numbers are located on the left side of the bill of material in the part number field. When referencing or ordering parts from Amplifier Research, it is best to use the computer product number. Parts may also be ordered directly from the manufacturer using the manufacturer's part number if desired.

AAV	AAVID
ABB	ABBEON
ACA	ANTENNA CORPORATION OF AMERICA
ACO	ARCO
ADA	ADALET
AEC	ARNOLD ENGINEERING COMPANY
AEP	APPLIED ENGINEERING PRODUCTS
AER	AEROQUIP
AEX	AEROVOX
AHC	AIRLINE HYDRAULICS CORPORATION
AIN	AIN PLASTICS
AIR	AIRPAX
AIT	AERITALIA
AJO	A. J. OSTER FOILS INCORPORATED
ALC	ALCO
ALE	ALLIED ELECTRONICS
ALI	ASTROLAB INCORPORATED
ALP	ALPHA
AMA	AMATOM
AMC	AMPEX CORPORATION
AMH	AMPHENOL
AMI	AMPLIFONIX INCORPORATED
AMP	AMP INCORPORATED
AMR	AMREP
AMS	AMERICAN STANDARD
ANZ	ANZAC
APG	AP-O-GEE INDUSTRUES
APN	AMERICAN PRECISION
APO	AMPROBE
APP	A. P. PRODUCTS INCORPORATED
APR	AMPERITE
APX	AMPEREX
ARC	AMPLIFIER RESEARCH CORPORATION
ARE	ARROW ELECTRONICS
ARO	AROMAT CORPORATION
ARP	APPLE RUBBER PRODUCYS INCORPORATED
ASB	ASTRO-BUBBLES
ASC	AMERICAN SWITCH CORPORATION
ASD	AMERICAN STANDARD
ASP	ASSOCIATED SPRING
AST	ASTEC
ATC	AMERICAN TECHNICAL CERAMICS CORPORATION
ATL	ATLEE
AUG	AUGAT INTERCONN COMP DIVISION
AVA	AVA CORPORATION
AVF	ALLENTOWN VALVE & FITTING COMPANY
AVT	AVANTEK
AVX	AVX CORPORATION
A-B	ALLEN BRADLEY
A-C	ANDREW CORPORATION
A-M	AEC MAGNETICS
A-S	ALCOSWITCH
A-T	AHAM-TOR
BBI	BARON-BLAKSLEE INCORPORATED

BDX ..... BENDIX
BEL ..... BELDEN
BER ..... BERKLEY & COMPANY
BEY ..... BEY ELECTRIC
BFG ..... B.F. GOODRICH
BFI ..... BUCKEYE FORGE INCORPORATED
BKM ..... BECKMAN
BOK ..... BOKER'S INCORPORATED
BOP ..... BOPLA ENCLOSURES
BOR ..... BOURNS
BRD ..... BIRD ELECTRONICS
BUD ..... BUD COMPANY
BUS ..... BUSS
B-C ..... BONCO CORPORATION
B-E ..... BRIM ELECTRONICS
B-T ..... BEAU-TECH
B-V ..... BEAU/VERNITRON
CAD ..... CADDOCK
CAM ..... CAMBION
CAN ..... CANNON
CAP ..... CANPACK
CAR ..... CARLING
CAT ..... CATAMOUNT
CCI ..... CRL COMPONENTS INCORPORATED
CDC ..... COMPACT DEVELOPMENT CORPORATION
CDI ..... COAXIAL DYNAMICS INCORPORATED
CEN ..... CENTURY ELECTRONICS
CES ..... COUNTY ELECTRIC SUPPLY COMPANY
CGI ..... COMPONENT GENERAL INCORPORATED
CHE ..... CHERRY
CHR ..... CONNETICUT HARD RUBBER
CIN ..... CINCH
CJS ..... CENTRAL JERSEY SCREW & BOLT
CKS ..... C & K COMPONENTS INCORPORATED
CLA ..... CLAROSTAT
CLC ..... CHICAGO LOCK COMPANY
CMI ..... CERAMIC MAGNETICS INCORPORATED
CMP ..... COMMERCIAL PLASTICS
CMT ..... CONTINENTAL MICROWAVE & TOOL
CNF ..... CINCINNATI FAN
COE ..... COMP ENTERPRISES
COL ..... COLDER PRODUCTS
COM ..... COMPUCON
CON ..... CONCORD ELECTRONICS
COP ..... COMPLETE PACKAGING
COR ..... CORCOM
CPC ..... C.P. CLARE
CPI ..... COMPUTER PRODUCTS INC.
CPL ..... COMPULITE
CPS ..... COLOR PRINT SCREENING
CRC ..... CRC CHEMICALS
CTS ..... CTS OF BERNE INCORPORATED
CUS ..... CUSTOM
C-D ..... CORNELL-DUBILIER

C-E ..... CORNING ELECTRONIC
C-I ..... CRAFTECH INDUSTRIES
C-P ..... CAPLUG COMPANY
C-T ..... CANADIAN THERMOSTATS
CWD ..... CESIWID INCORPORATED
DAL ..... DALE
DEL ..... DELKER
DAY ..... DAYTON
DEN ..... DENNISON
DIA ..... DIALIGHT
DII ..... DATONA INDUSTIRES INCORPORATED
DIL ..... DIELECTRIC LABS
DKK ..... DOW KEY/KILOVAC
DSC ..... DE-STA-CO
DTP ..... DOYLESTOWN PRINTING
DUP ..... DU PONT ELECTRONICS
D-E ..... DARBURN ELECTRONICS
D-G ..... DIMCO-GRAY
D-K ..... DIGI-KEY-CORPORATION
EBM ..... EBM IND.
ECO ..... EATON CORPORATION
ECS ..... ECS INTERNATIONAL
EFJ ..... E.F.JOHNSON
EGL ..... ELGAL
EIC ..... ELCTRO INSULATION CORPORATION
EIM ..... EIMAC
ELC ..... ELECTRO SWITCH CORPORATION
ELM ..... ELMENCO
ELR ..... ENGLER INSTRUMENT
EMC ..... E.M.C. TECHNOLOGY
EMI ..... ELECTRONIC MEASUREMENTS,INC.
EMM ..... ENGLEMANN MICROWAVE
EOD ..... ELECTRO-OPTIC DEV
ERI ..... ERIE TECHNOLOGY PRODUCTS
ERM ..... EREM CORPORATION
ESX ..... ESSEX
ETA ..... ETA
EVE ..... EVEREST ELECTRONIC EQUIPMENT
EVR ..... EVEREADY
EWS ..... ELMWOOD SENSOR
E-C ..... EMERSON AND CUMMING
EZF ..... EZ FORM CABLE CORPORATION
FCH ..... FAIRCHILD
FCI ..... FILTER CONCEPTS INCORPORATED
FER ..... FERRONICS
FEX ..... FERROXCUBE
FLO ..... FLO TRAN PNEU-DRAULICS INCORPORATED
FOS ..... FIBRE OPTIC COMMUNICATION SPECIALTIES
FRA ..... FRANZUS
FRK ..... FROST KING
FRM ..... FREEDMAN/MALTA
FRP ..... FAIR-RITE PRODUCTS
FUJ ..... FUJITSU
FWC ..... FW CAPACITORS

F-S ..... FASTENER SPECIALTY
GAL ..... GALLAGER
GCE ..... G.C. ELECTRONICS
GCS ..... GLOBAL COMPUTER SALES
GEM ..... GEM
GDC ..... GENERAL DEVICES CO.
GOL ..... GOLDKAMP
GRA ..... GRAINGER
GRE ..... GREYARC
GRS ..... GENERAL RADIO SUPPLY
GSI ..... GSI
GTL ..... GILWAY TECHNICAL LAMP
G-E ..... GENERAL ELECTRIC COMPANY
G-I ..... GENERAL INSTRUMENT
HAD ..... HARRY DAVIES
HAN ..... HANSON
HAV ..... HAVERHILL CABLE AND MANUFACTURING
HDB ..... HOMER D. BRONSON
HEC ..... HIGH ENERGY CORPORATION
HEI ..... HEINEMANN
HEY ..... HEYCO MOLDED PRODUCTS
HEX ..... HEXACON
HHS ..... H.H. SMITH
HII ..... HOLODAY INDUSTRIES INCORPORATED
HIM ..... HITACHI MAGNETS
HMF ..... HILTON MANUFACTURING
HMN ..... HENRY MANN
HOL ..... HOLLINGSWORTH
HOW ..... HONEYWELL
HPC ..... H.P.CADWALLADER
HSI ..... HUBER & SUHNER INCORPORATED
HUB ..... HUBBEL
HUC ..... HUDSON CAN COMPANY
HUV ..... HANDLES UNLIMITED VERMALINE DIV.
HWK ..... HAWKINS METAL FABRICATION
H-C ..... HARTWELL CORP. COMMERCIAL DIVISION
H-P ..... HEWLETT/PACKARD
H-R ..... HERBACH & RADEMAN
IBM ..... IBM
ICI ..... ILLINOIS CAPACITOR INCORPORATED
IDE ..... IDEAL
IER ..... IERC
ILS ..... ILSCO
IMB ..... IMB
IMC ..... IMC
INC ..... INTERNATIONAL CRYSTAL MFG COMPANY
INM ..... INMET
IPI ..... INSULFAB PLASTICS INCORPORATED
IRC ..... INTERNATIONAL RESISTIVE COMAPNY, INC.
IRM ..... IR-CRYDOM
ITF ..... ITERFAN
ITJ ..... ITT-JENNINGS
ITT ..... ITT CANNON
I-E ..... IMPERIAL EASTMAN

I-G ..... INDIANA GENERAL
I-R ..... INTERNATIONAL RECTIFIER CORPORATION
I-S ..... INSTRUMENT SPECIALTIES
JAR ..... J.A. REINHARDT
JDE ..... JOHANSON DIELECTRICS
JER ..... JERGENS INCORPORATED
JFD ..... JFD
JOH ..... JOHANSON
JON ..... JONATHAN MANUFACTURING
JOR ..... JORITA
JSR ..... JAY-CEE SALES & RIVET INC.
KCC ..... KEYSTONE CARBON COMPANY
KEY ..... KEYSTONE ELECTRONICS
KIN ..... KINGS
KLE ..... KLEIN
KSD ..... KESTER SOLDER DIVISION
KUL ..... KULKA
K-D ..... KD COMPONENTS
LAF ..... LAFRANCE CORPRATION
LBA ..... LAMBDA ELECTRONICS INCORPORATED
LEM ..... LIAISONS ELECTRONIQUES MECHANIQUES
LEV ..... LEVITON MANUFACTURING COMPANY
LIF ..... LITTLEFUSE
LOC ..... LOCTITE CORPORATION
LOR ..... LORD CORPORATION
MAC ..... MACOM
MAL ..... MALLORY
MAR ..... MARKEL CORPORATION
M-C ..... MICROCHIP
MCG ..... McGILL
MCR ..... MICREL INCORPORATED
MCS ..... McMASTER CARR SUPPLY COMPANY
MCX ..... MICRO-COAX
MEA ..... MITSUBISHI ELECTRONICS AMERICA, INC.
MEP ..... MEPCO-ELECTRA
MET ..... METUCHEN CAPACITOR
MFG ..... MANUFACTURER
MHW ..... M.H. & W. COMPANY
MIC ..... MICROMETALS IRON POWDER CORES
MIN ..... MINI-CIRCUITS
MIP ..... MICRO PLASTICS
MIR ..... MINOR RUBBER COMPANY
MIS ..... MICROSWITCH
MIT ..... MULTITHERM CORPORATION
MLC ..... M. LADER COMPANY
MLX ..... MILL-MAX CORP
MMI ..... MAGNETIC METALS INCORPORATED
MMM ..... MINNESOTA MINING MANUFACTURING
MOC ..... MOCAP
MOD ..... MODUTEC
MOL ..... MOLEX
MOR ..... MORS COMPONENTS INC
MON ..... MONSANTO
MOS ..... M/A-COM OMNI SPECTRA INCORPORATED

MOT ..... MOTOROLA
MPC ..... MULTI-PRODUCTS
MRS ..... MARSH
MSC ..... MICROSEMI CORPORATION
MUE ..... MUELLER
MUR ..... MURATA/ERIE
MWA ..... MICROWAVE ASSOC
MWC ..... MIDWEST COMPONENTS
MWM ..... MIDWEST MICROWAVE
MWS ..... MICROWAVE SEMI-CONDUCTORS
M-C ..... M & C SPECIALTIES
M-E ..... MASTER ELECTRICIAN
M-M ..... MULTI-MAX CORPORATION
NAB ..... NORTH AMERICAN BRASS AND COPPER
NEB ..... NEBS INCORPORATED
NET ..... NETEK
NEW ..... NEWAGE INDUSTRIES
NIC ..... NIC COMPONENTS
NIE ..... NIELSEN HARDWARE
NJS ..... N.J. SEMI
NKK ..... NKK SWITCHES
NMB ..... NMB TECHNOLOGIES INCORPORATED
NOB ..... NOBLITT BROTHERS & COMPANY
NPP ..... NORTH PENN POLISHING & PLATING
NSI ..... NATIONAL SEMI-CONDUCTOR CORPORATION
NVS ..... NORTHAMPTON VALLEY SERVICE COMPANY
N-M ..... NATIONAL MOLDITE
N-P ..... NEM-PACK
OAP ..... OLEAN ADVANCED PRODUCTS
OHA ..... OHIO ART
OHN ..... OHMLITE
OKI ..... OK INDUSTRIES
OME ..... OMEGA
OMR ..... OMRON
OPM ..... OPTIMA
OPT ..... OPTIMAX
PAE ..... PACIFIC ELECTRICORD
PAJ ..... PHILLIPS AND JACOBS
PAM ..... PAMOTOR
PAN ..... PANASONIC
PAP ..... PAPST
PBC ..... POTTER & BRUMFIELD CORPORATION
PCI ..... PENN CRAFT INDUSTRIES
PEC ..... PENN CONTROLS
PCC ..... PANEL COMPONENTS CORPORATION
PEK ..... PEAK
PEN ..... PENN ENGINEERING
PFL ..... POLYFLON
PFS ..... POWER FILM SYSTEMS
PHC ..... PARKER HANNIFIN CORPORATION
PHI ..... POWER HYBRID
PLM ..... PLASTIC & METALS
PMP ..... PRECISION METAL PROD.
PMI ..... PRECISION MONOLITHICS INC.

PNT ..... PANDUIT
P-O ..... POWER ONE
POW ..... POWEREX
PRC ..... PRECISION RUBER COMPANY
PSI ..... POWER SEMI-CONDUCTOR INCORPORATED
PSP ..... PROJECT SUPPORT INCORPORATED
PTC ..... PRECISION TUBE COMPANY
P-B ..... PENN-BASCO
QUI ..... QUICKSET
RAF ..... R.A.F. ELECTRONIC HARDWARE INCORPORATED
RCA ..... RCA
RCC ..... RAYCHEM CORPORATION
RCL ..... RCL
REL ..... RELIANCE MICA COMPANY
REM ..... REMTEK
RES ..... ROSE ENCLOSURES SYSTEMS
RFP ..... RF POWER COMPONENRS INC
RIC ..... RICHCO
ROG ..... ROGAN
RON ..... RONCO CORPORATION
ROS ..... ROSS ENGINEERING
ROT ..... ROTRON
ROW ..... ROWLAND
RPC ..... REPUBLIC PACKAGING CORPORATION
RUS ..... RUSSEL INDUSTRIES
R-H ..... RYAN HERCO
R-N ..... ROBINSON-NUGENT
R-S ..... RADIO SHACK
SAG ..... SAGE LABORATORIES
SAM ..... SAMTECH
SBC ..... SCHROEDER BROTHERS CORPORATION
SCD ..... SCHADOW
SCH ..... SCHAUER
SCI ..... SPECTRUM CONTROL INCORPORATED
SCO ..... SCOTCH
SEA ..... SEASTROM INCORPORATED
SEL ..... SELECTRO CORPORATION
SEM ..... SEMIKRON
SEV ..... SEVENTY-THREE MANUFACTURING COMPANY
SGL ..... SGL INDUSTRIES
SGS ..... SGS
SIE ..... SIEMENS
SIG ..... SIGNETICS
SIM ..... SIMPSON
SLE ..... SL ELECTRONICS
SOC ..... SOUTHCO
SOE ..... STANDARD OIL ENGINEERING
SOH ..... SOHIO
SOL ..... SOLDAPULLT
SOW ..... SOLDER WICK
SPC ..... SPC TECHNOLOGY
SPE ..... SPECTROL
SPL ..... SPRA-LUBE
SPR ..... SPRAGUE

SPS ..... SPRINGFIELD PAPER SPECIALISTS
SSI ..... SWITCHING SYSTEMS INTERNATIONAL
SSM ..... SOLD STATE MICROWAVE
SSS ..... S & S TECH
SST ..... SST
STA ..... STANCOR
STB ..... SEAL-TITE BAG COMPANY
STI ..... STIMPSON
STM ..... SEASTROM MANUFACTURING COMPANY
STP ..... STACKPOLE
STW ..... STOCKWELL
SUS ..... SUNSHINE SCIENTIFIC
SWC ..... SWITCHCRAFT
SHW ..... STEWERT-WARNER HOBBS DIVISION
S-B ..... SPEED BEND
S-E ..... STEMCO/ENGLER
S-F ..... SYDNEY FRIEDRICH
S-L ..... SWAGELOCK
S-M ..... STRIP-MASTER
TAB ..... THOMAS & BETTS
TAI ..... TAI CORPORATION
TAN ..... TANSISTOR
TCC ..... THOMSON PASSIVE COMPONENTS CORP
TCI ..... TRA-CON INCORPORATED
TEC ..... TECKNIT
TEL ..... TELEFUNKEN
TEM ..... TEMPIL
TET ..... TECHNITOOL
TFI ..... THRUWAY FASTNERS INCORPORATED
THM ..... THERMALLOY
THS ..... THREADED SCREW PRODUCTS COMPANY
TII ..... TEXAS INSTRUMENTS INCORPORATED
TMS ..... TIMES MICROWAVE SYSTEMS
TRD ..... TRIAD
TRI ..... TRI-COUNTY
TRS ..... TRI-STATE
TRT ..... TRAVERS TOOL COMPANY
TRW ..... TRW
TUS ..... TUSONIX
TXS ..... TEXAS SPECTRUM
T-P ..... THOMAS PRODUCTS
UEC ..... UNITED ELECTRIC
ULI ..... ULINE
UNC ..... UNICORP
UN ..... UNELCO
UNI ..... UNIROYAL
USC ..... USECO
UTI ..... UTICA
V-C ..... VICOR INC.
VIC ..... VICTOREEN
VIT ..... VITRAMON
VOL ..... VOLTRONICS CORPORATION
WAG ..... WAGO COPR
WAK ..... WAKEFIELD

WAL.....WALDOM
WCO ..... WECO
WEC.....WESTERN ENTERPRISES COMAPNY
WEI ..... WEICO
WEL .....WELLER
WES ..... WEINSTEIN
WGV .....WARREN G-V
WIL .....WILTRON
WIS .....WEBER INDUSTRIAL SUPPLY COMPANY
WIT ..... WITTEK DIVISION, A MICRODOT COMPANY
WPI .....WIRE PRODUCTS INCORPORATED
WPS .....WORKPLACE SYSTEM
WSC ..... WEST POINT SUPPLY COMPANY
WWP..... WESTERN WIRE PRODUCTS
W-E ..... WELLS ELECTRONIC INCORPORATED
W-I .....WEIDMULLER INCORPORATED
W-L ..... WARD LEONARD
XAC .....X-ACTO
XCA ..... XCELITE
YNG ..... YOUNGS
YPC ..... YARDLEY PRODCTS CORPORATION
ZER .....ZERO MANUFACTURING COMPANY
ZIE .....ZIERIC

AMPLIFIER RESEARCH

14:21:00 17 SEP 1996 * * * SINGLE LEVEL BILL OF MATERIAL LISTING * * * REPORT: E0056 PAGE: 1

BILL NO: 1007735-501M REV: - U/M: EA DRAWING NO:
MDL.MODEL 10SIG4

SEQ	PART NUMBER	REV	D E S C R I P T I O N	U/M	QUANTITY-PER	DRAWING NUMBER	REF-DSGN
0010	1007414	B	SCHEM DIAG,10S1G4	EA	REF	ARC-C\1007414	R(A)
0020	1007390	-	ASSY DWG,MODEL 10S1G4	EA	REF	ARC-D\1007390	R(B)
0030	1007390-501	-	MODEL 10S1G4,10 WATTS CW,800MHz-4.2GHz	EA	REF	ARC-D\1007390	BOM
0040	1007696	A	ASSY DWG,AMP ASSY	EA	REF	ARC-D\1007696	R(D)
0050	1007696-501	B	AMP ASSY	EA	REF	ARC-D\1007696	BOM
0060	1007697	-	ASSY DWG,PS ASSY	EA	REF	ARC-D\1007697	R(B)
0070	1007697-501	-	PS ASSY	EA	REF	ARC-D\1007697	BOM
0080	1007391	B	ASSY DWG,CTRL PNL ASSY	EA	REF	ARC-D\1007391	R(B)
0090	1007391-501	C	CTRL PNL ASSY	EA	REF	ARC-D\1007391	BOM
0100	1007737	-	SCHEM DIAG,REG/FAULT BD	EA	REF	ARC-B\1007737	B
0110	1007736	-	ASSY DWG,PWB ASSY,REG/FAULT BD	EA	REF	ARC-B\1007736	B
0120	1007736-501	-	PWB ASSY,REG/FAULT BD	EA	REF	ARC-B\1007736	BOM
0130	1007748-501	-	HARNESS ASSY	EA	REF		BOM
0140	1007698	B	ASSY DWG,RF ASSY	EA	REF	ARC-D\1007698	R(B)
0150	1007698-501	D	RF ASSY	EA	REF	ARC-D\1007698	BOM
0160	1007691	B	SCHEM DIAG,VAR.GAIN/PROT CKT	EA	REF	ARC-D\1007691	R(B)
0170	1007451	C	ASSY DWG,PWB ASSY,VAR GAIN AMP	EA	REF	ARC-B\1007451	R(B)
0180	1007451-501	B	PWB ASSY,VAR GAIN AMP	EA	REF	ARC-B\1007451	BOM
0190	1007401	B	ASSY DWG,PWB ASSY,SPLITTER/DETR	EA	REF	ARC-C\1007401	R(A)
0200	1007401-501	C	PWB ASSY,SPLITTER/DETR	EA	REF	ARC-C\1007401	BOM
0210	1007454	A	ASSY DWG,PWB ASSY,LINEARIZER/CTRL BD	EA	REF	ARC-B\1007454	B
0220	1007454-501	D	PWB ASSY,LINEARIZER/CTRL BD	EA	REF	ARC-B\1007454	BOM
0230	1007692	B	SCHEM DIAG,1 W AMP\BIAS CTRL	EA	REF	ARC-C\1007692	R(A)
0240	1007472	A	ASSY DWG,PWB ASSY,1 WATT AMP	EA	REF	ARC-C\1007472	R(A)

BILL NO: 1007735-501M REV: - U/M: EA DRAWING NO:
MDL.MODEL 10SIG4

SEQ	PART NUMBER	REV	D E S C R I P T I O N	U/M	QUANTITY-PER	DRAWING NUMBER	REF-DSGN
0250	1007472-501	B	PWB ASSY,1 WATT AMP	EA	REF	ARC-C\1007472	BOM
0260	1007504	B	ASSY DWG,PWB ASSY,BIAS CTRL,1 WATT AMP	EA	REF	ARC-B\1007504	B
0270	1007504-501	A	PWB ASSY,BIAS CTRL,1 WATT AMP	EA	REF	ARC-B\1007504	BOM
0280	1007369	-	SCHEM DIAG,DRIVER	EA	REF	ARC-C\1007369	R(A)
0290	1007547	-	SCHEM DIAG,OUTPUT STAGE	EA	REF	ARC-B\1007547	R(B)
0300	1007521	B	ASSY DWG,PWB ASSY,DRIVER AMP	EA	REF	ARC-C\1007521	R(A)
0310	1007521-501	C	PWB ASSY,DRIVER AMP	EA	REF	ARC-C\1007521	BOM
0320	1007545-501	C	COMPNT KIT	EA	REF		BOM
0330	1007407	A	SCHEM DIAG,5W AMP	EA	REF	ARC-C\1007407	R(A)
0340	1007881	A	SCHEM DIAG,OUTPUT STAGE	EA	REF	ARC-B\1007881	B
0350	1007406-501	B	AMPL ASSY,FINAL	EA	REF	ARC-C\1007406	BOM
0360	1007873-501	A	COMPNT KIT	EA	REF		BOM
0370	1007617	A	ASSY DWG,PWB ASSY,SPLITTER	EA	REF	ARC-C\1007617	R(A)
0380	1007617-501	-	PWB ASSY,SPLITTER	EA	REF	ARC-C\1007617	BOM

* * * END OF REPORT E0056 - 14:21:01 17 SEP 1996 * * *

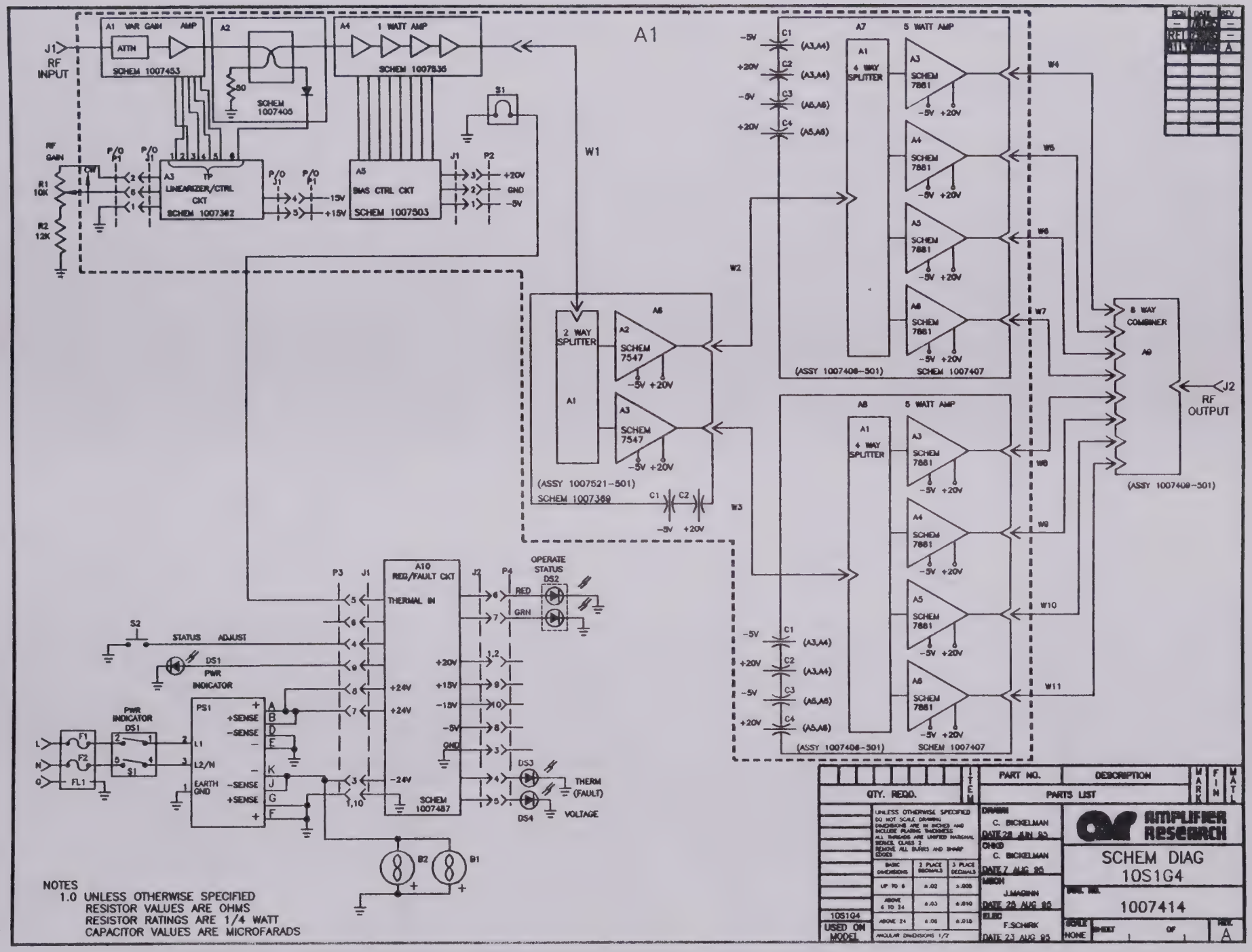
A1
J1
RF INPUT
A1 VAR GAIN AMP
ATTN
SCHEM 1007453
A2
SCHEM 1007406
A4 1 WATT AMP
SCHEM 1007536
S1
RF GAIN
R1 10K
R2 12K
A3 TP
LINEARIZER/CTRL CKT
SCHEM 1007362
A5
BIAS CTRL CKT
SCHEM 1007503
J1
P2
+20V
GND
-5V
-15V
+15V
W1
W2
W3
A6
2 WAY SPLITTER
A1
A2
SCHEM 7547
A3
SCHEM 7547
-5V +20V
(ASSY 1007521-501)
SCHEM 1007369
C1
C2
A7
5 WATT AMP
A1
4 WAY SPLITTER
A3
SCHEM 7881
A4
SCHEM 7881
A5
SCHEM 7881
A6
SCHEM 7881
(ASSY 1007408-501)
SCHEM 1007407
A8
5 WATT AMP
A1
4 WAY SPLITTER
A3
SCHEM 7881
A4
SCHEM 7881
A5
SCHEM 7881
A6
SCHEM 7881
(ASSY 1007408-501)
SCHEM 1007407
W4
W5
W6
W7
W8
W9
W10
W11
8 WAY COMBINER
A9
(ASSY 1007409-501)
J2
RF OUTPUT
A10
RED/FAULT CKT
THERMAL IN
+20V
+15V
-15V
-5V
GND
+24V
+24V
-24V
SCHEM 1007487
P3
J1
J2
P4
OPERATE STATUS
DS2
RED
GRN
S2
STATUS ADJUST
DS1
PWR INDICATOR
PWR INDICATOR
DS1
S1
F1
F2
FL1
L
N
G
PS1
+SENSE
-SENSE
L1
L2/N
EARTH GND
-SENSE
+SENSE
DS3
DS4
THERM (FAULT)
VOLTAGE
B2
B1
NOTES
1.0 UNLESS OTHERWISE SPECIFIED
RESISTOR VALUES ARE OHMS
RESISTOR RATINGS ARE 1/4 WATT
CAPACITOR VALUES ARE MICROFARADS
QTY. REQD.
ITEM
PART NO.
DESCRIPTION
PARTS LIST
MARK
FIM
MATL
UNLESS OTHERWISE SPECIFIED DO NOT SCALE DRAWING DIMENSIONS ARE IN INCHES AND INCLUDE PLATING THICKNESS ALL THREADS ARE UNIFIED NATIONAL SERIES, CLASS 2 REMOVE ALL BURRS AND SHARP EDGES
BASIC DIMENSIONS
2 PLACE DECIMALS
3 PLACE DECIMALS
UP TO 6
±.02
±.005
ABOVE 6 TO 24
±.03
±.010
ABOVE 24
±.06
±.015
ANGULAR DIMENSIONS 1/2
10S1G4
USED ON MODEL
DRAWN C. BICKELMAN DATE 28 JUN 95
CHKD C. BICKELMAN DATE 7 AUG 95
MECH J.MAGINN DATE 28 AUG 95
ELEC F.SCHIRK DATE 23 AUG 95
AMPLIFIER RESEARCH
SCHEM DIAG
10S1G4
DWG. NO.
1007414
SCALE NONE
SHEET 1 OF 1
REV. A

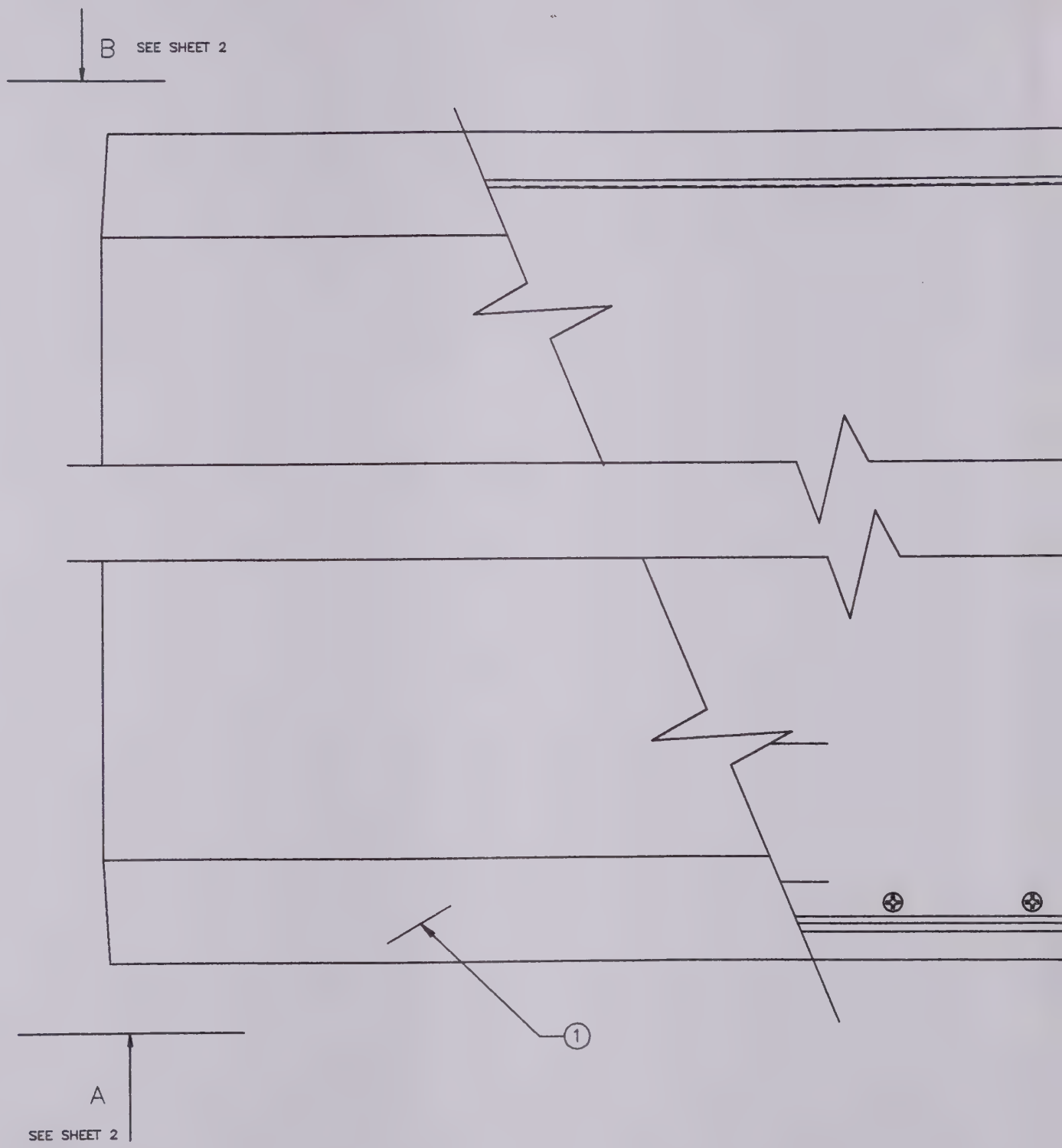
B
SEE SHEET 2
1
A
SEE SHEET 2

ECN	DATE	REV
–	[illegible]	1
–	[illegible]	2
RED	[illegible]	–

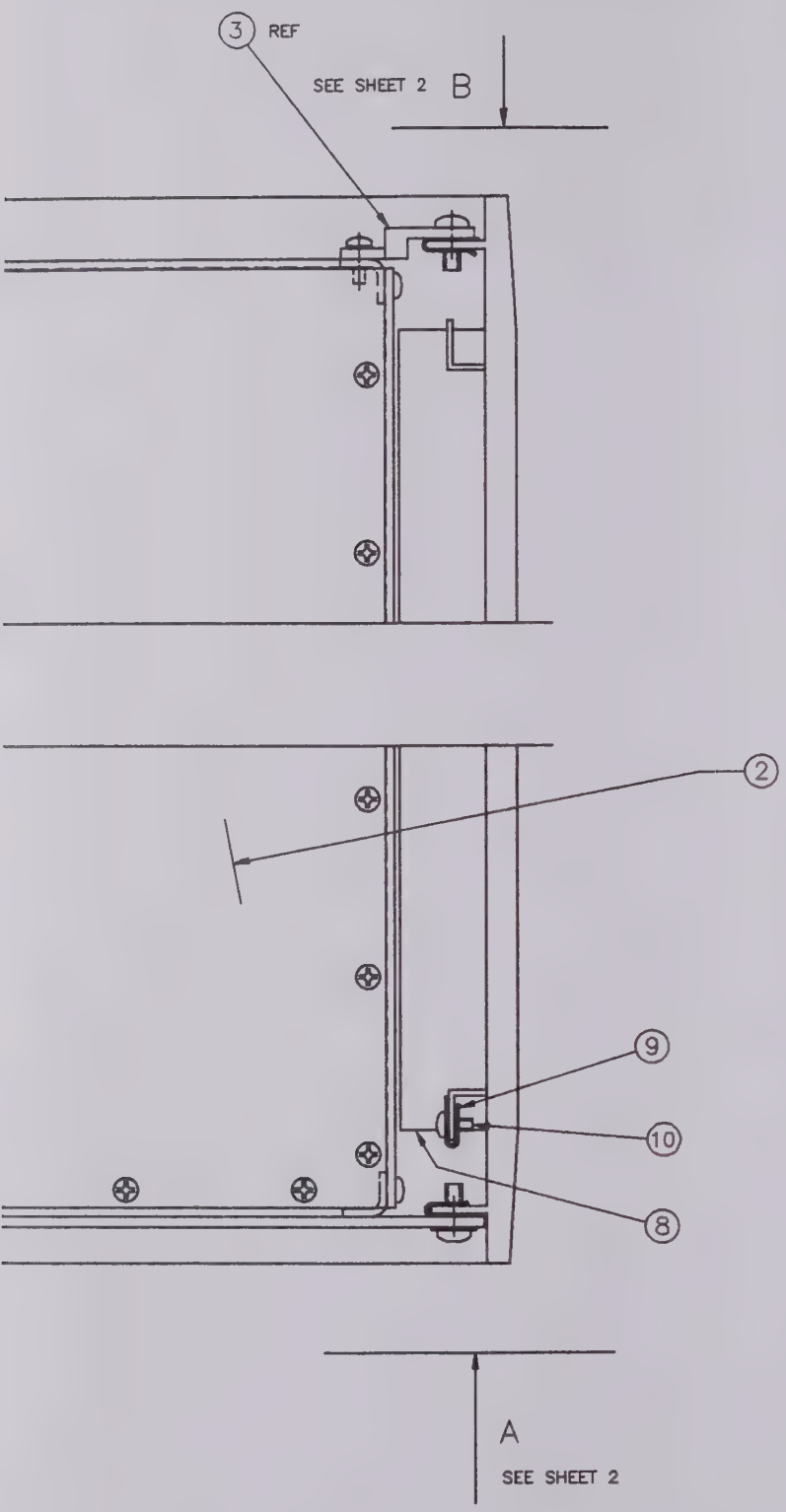

FOR BOM SEE 1007390-501

QTY. REQD.	ITEM	PART NO.	DESCRIPTION	MARK	FIN	MATL
		PARTS LIST				

UNLESS OTHERWISE SPECIFIED
DO NOT SCALE DRAWING
DIMENSIONS ARE IN INCHES AND INCLUDE PLATING THICKNESS
ALL THREADS ARE UNIFIED NATIONAL SERIES, CLASS 2
REMOVE ALL BURRS AND SHARP EDGES

BASIC DIMENSIONS	2 PLACE DECIMALS	3 PLACE DECIMALS
UP TO 6	±.02	±.005
ABOVE 6 TO 24	±.03	±.010
ABOVE 24	±.06	±.015

ANGULAR DIMENSIONS 1/2°

USED ON MODEL: 10S1G4

DRAWN: C. BICKELMAN DATE 11 JUL 95
CHKD: C. BICKELMAN DATE 12 FEB 96
MECH: DATE
ELEC: DATE

AMPLIFIER RESEARCH

MODEL 10S1G4

DWG. NO. 1007390

SCALE 1/1 SHEET 1 OF 2 REV. SEE BLOCK

SHEET	1	2
REV	–	–

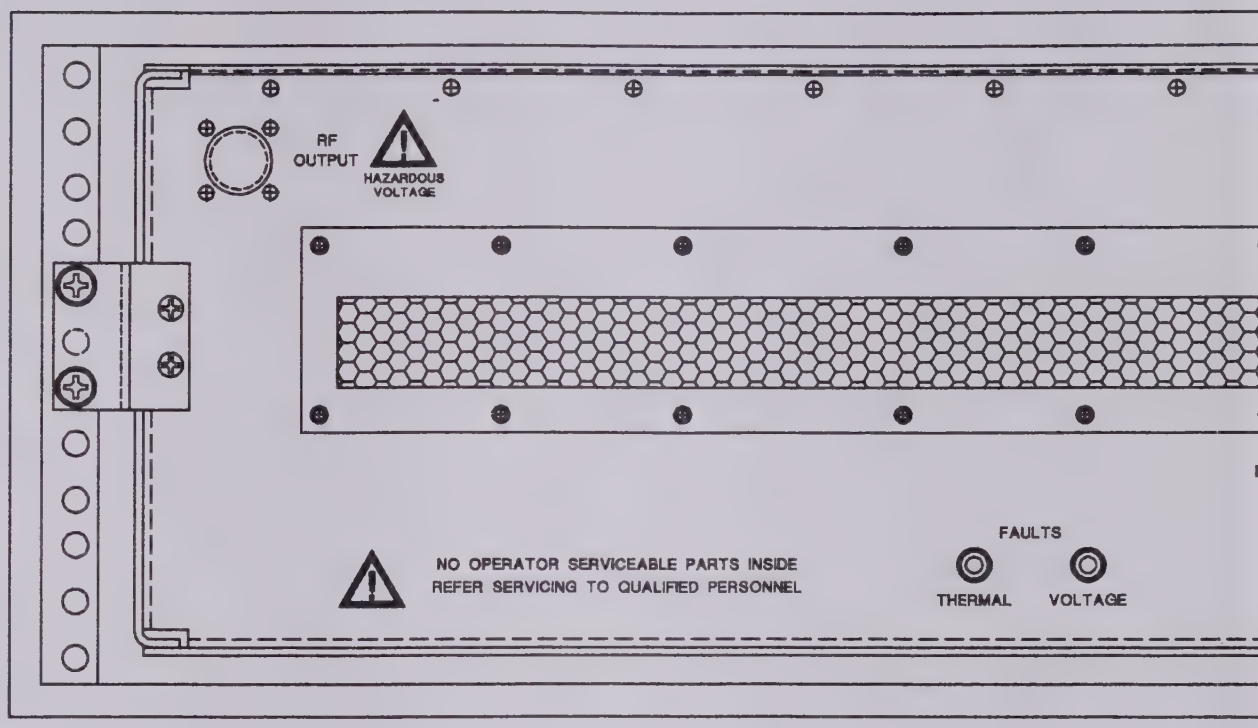

VIEW B–B
SEE SHT 1

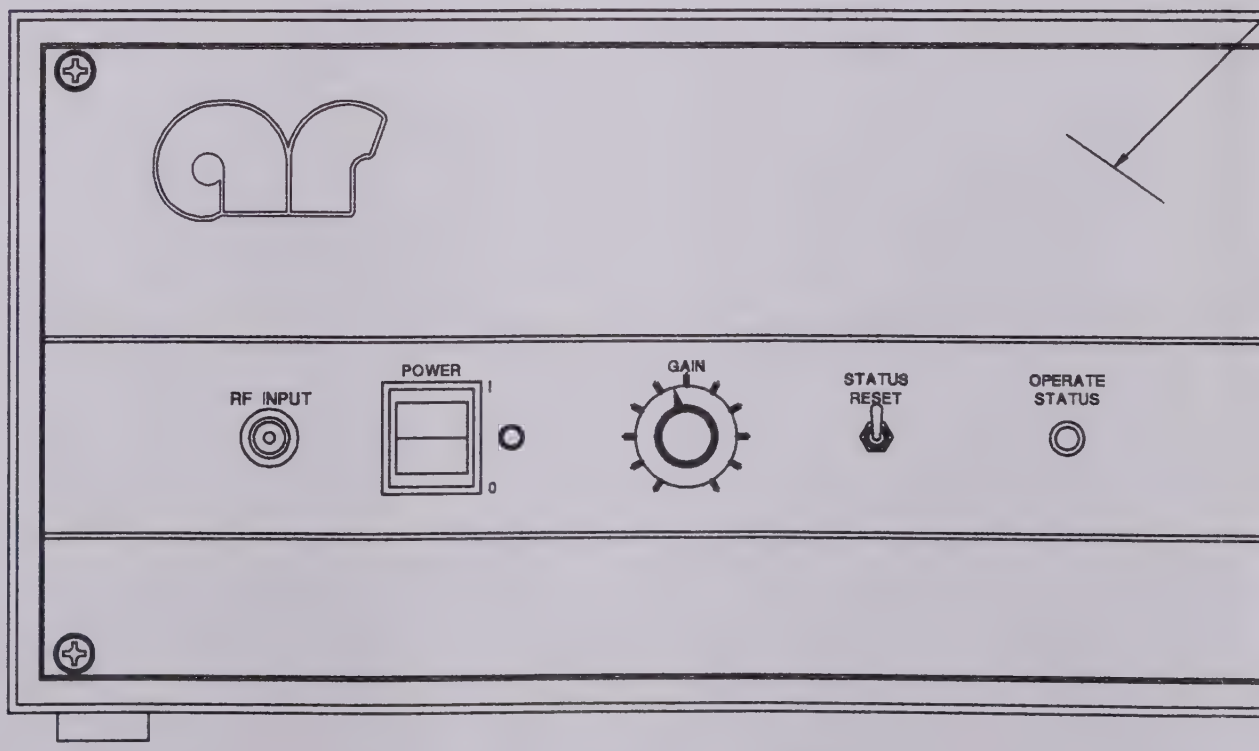

VIEW A–A
SEE SHT 1

ECN	DATE	REV
–	[illegible]	1
–	[illegible]	2
REL	[illegible]	–

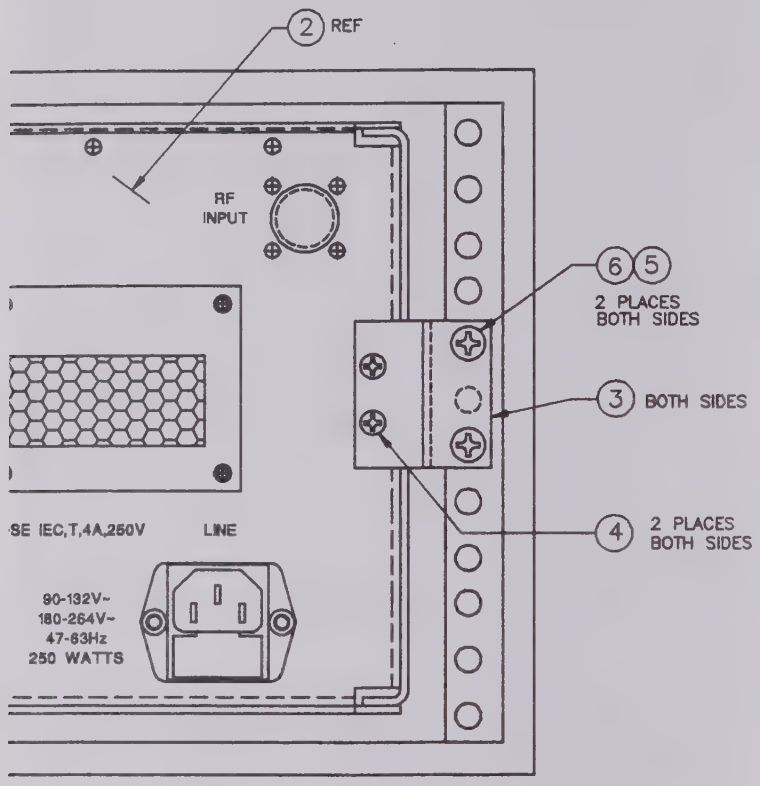

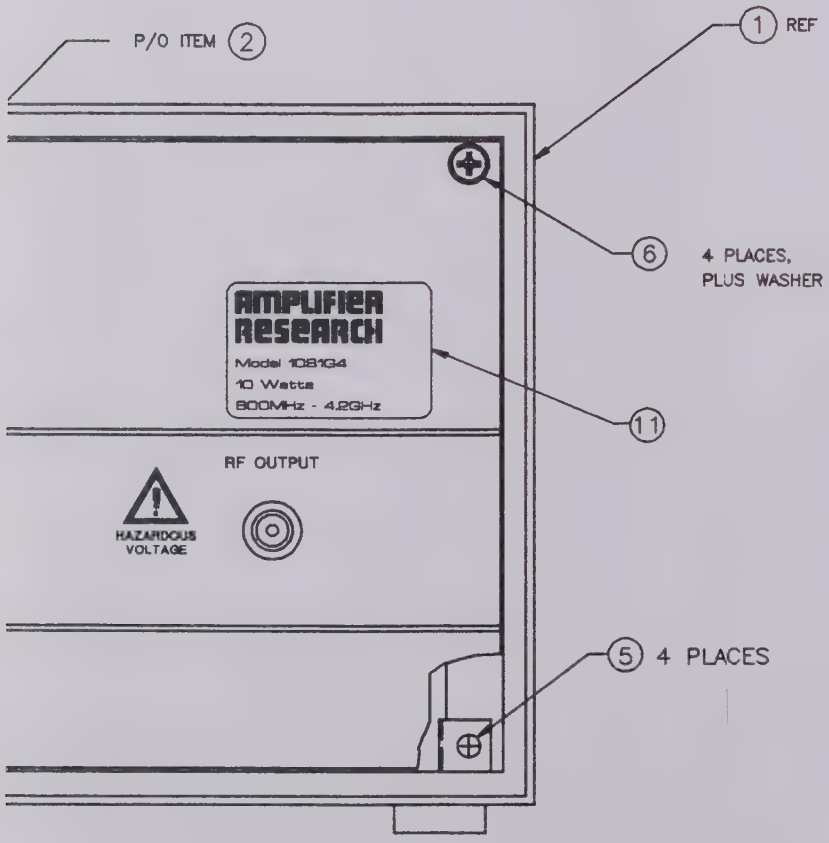

DWG. NO.		
1007390		
SCALE 1/1	SHEET 2 OF 2	REV SEE SH. 1

AMPLIFIER RESEARCH

14:18:08 17 SEP 1996 * * * SINGLE LEVEL BILL OF MATERIAL LISTING * * * REPORT: E0056 PAGE: 1

BILL NO: 1007390-501 REV: - U/M: EA DRAWING NO: ARC-D\1007390
MODEL 10S1G4,10 WATTS CW,800MHz-4.2GHz

SEQ	PART NUMBER	REV	D E S C R I P T I O N	U/M	QUANTITY-PER	DRAWING NUMBER	REF-DSGN
0010	1007414	B	SCHEM DIAG,10S1G4	EA	REF	ARC-C\1007414	
5000	1001576-302	K	CABINET,INST CASE,PERF BOT PNL,7.00 H,17.0 D	EA	1.000	ARC\1001576	1
5010	1007696-501	B	AMP ASSY	EA	1.000	ARC-D\1007696	2
5020	1006743-101	A	BRKT,SHPNG	EA	2.000	ARC-A\1006743	3
5030	11137		SCREW,MACH,PAN HD,CROSS-REC,S/ZN,6-32X.31,TYPE SW	EA	4.000		4
5040	94027		SCREW,PNL,DECORATIVE,WITH NYLON WASH	EA	8.000	OPM\HW-1	5
5050	14043		FASTENER,"U" TYPE,10B SCREW,PNL RANGE .125-.160	EA	8.000	ECO\C14810-102	6
5070	1005830-101	B	ANGLE,SUPPORT,SIDE	EA	2.000	ARC-B\1005830	8
5080	14044		FASTENER,CLIP NUT,"U" TYPE	EA	4.000	5A1\HW-52	9
5090	11130		SCREW,MACH,HEX HD SLTD,S/ZN PLTG,#10 X.50,TYPE B	EA	4.000		10
5100	1007735-501		MANUAL,MODEL 10S1G4	EA	4.000	ARC-A\1007735	
5110	66147		PWR CORD,3 COND,18AWG,UNIV DTCH	EA	1.000	PAE\C3120-008-BL	
5120	1007747-501	-	SPARE PARTS KIT	EA	1.000		
5130	1007226-101-F1-M5	M	PL,MODEL NO,10S1G4	EA	1.000	ARC-A\1007226	11

SYM	DATE	REV
–	[illegible]	1
–	[illegible]	2
–	[illegible]	3
REL	[illegible]	–
[illegible]	[illegible]	A

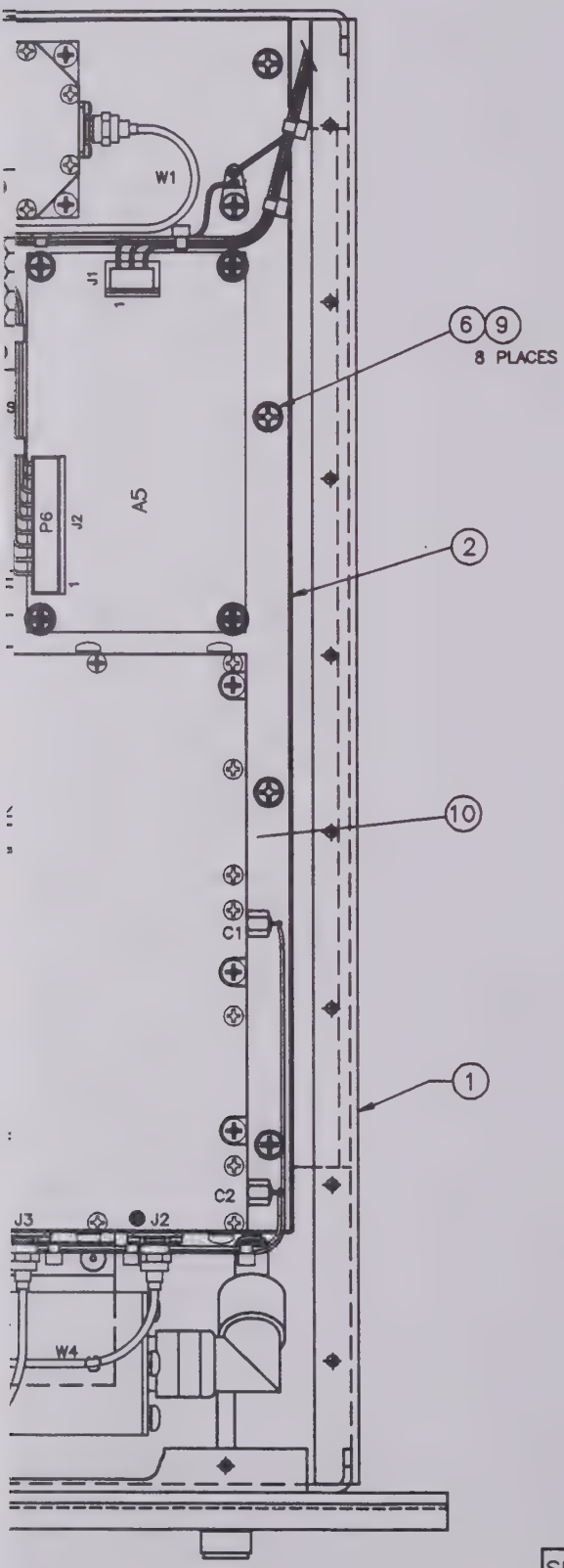

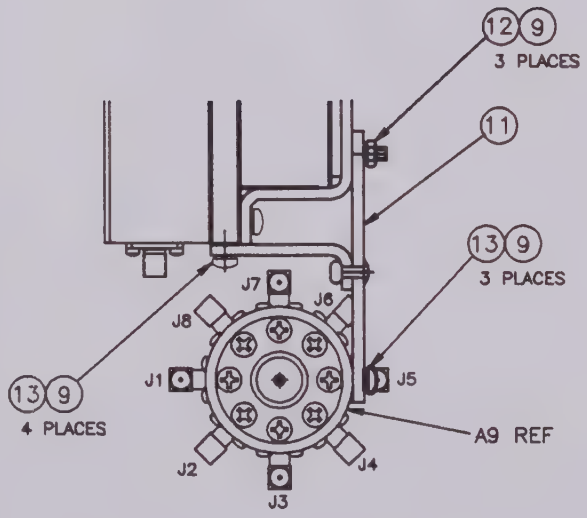

SECTION A–A

FOR BOM SEE 1007696–501

QTY. REQD.	ITEM	PART NO.	DESCRIPTION	MARK	FIN	MAT'L
		PARTS LIST				

UNLESS OTHERWISE SPECIFIED DO NOT SCALE DRAWING DIMENSIONS ARE IN INCHES AND INCLUDE PLATING THICKNESS ALL THREADS ARE UNIFIED NATIONAL SERIES, CLASS 2 REMOVE ALL BURRS AND SHARP EDGES

BASIC DIMENSIONS	2 PLACE DECIMALS	3 PLACE DECIMALS
UP TO 6	±.02	±.005
ABOVE 6 TO 24	±.03	±.010
ABOVE 24	±.06	±.015

ANGULAR DIMENSIONS 1/2°

DRAWN C. BICKELMAN DATE 11 JUL 94
CHKD C. BICKELMAN DATE 12 FEB 96
MECH DATE
ELEC DATE

AMPLIFIER RESEARCH

AMP ASSY

DWG. NO. 1007696

SCALE 1/1 SHEET 1 OF 2 REV SEE BLOCK

105104 USED ON MODEL

SHEET	1	2
REV	A	–

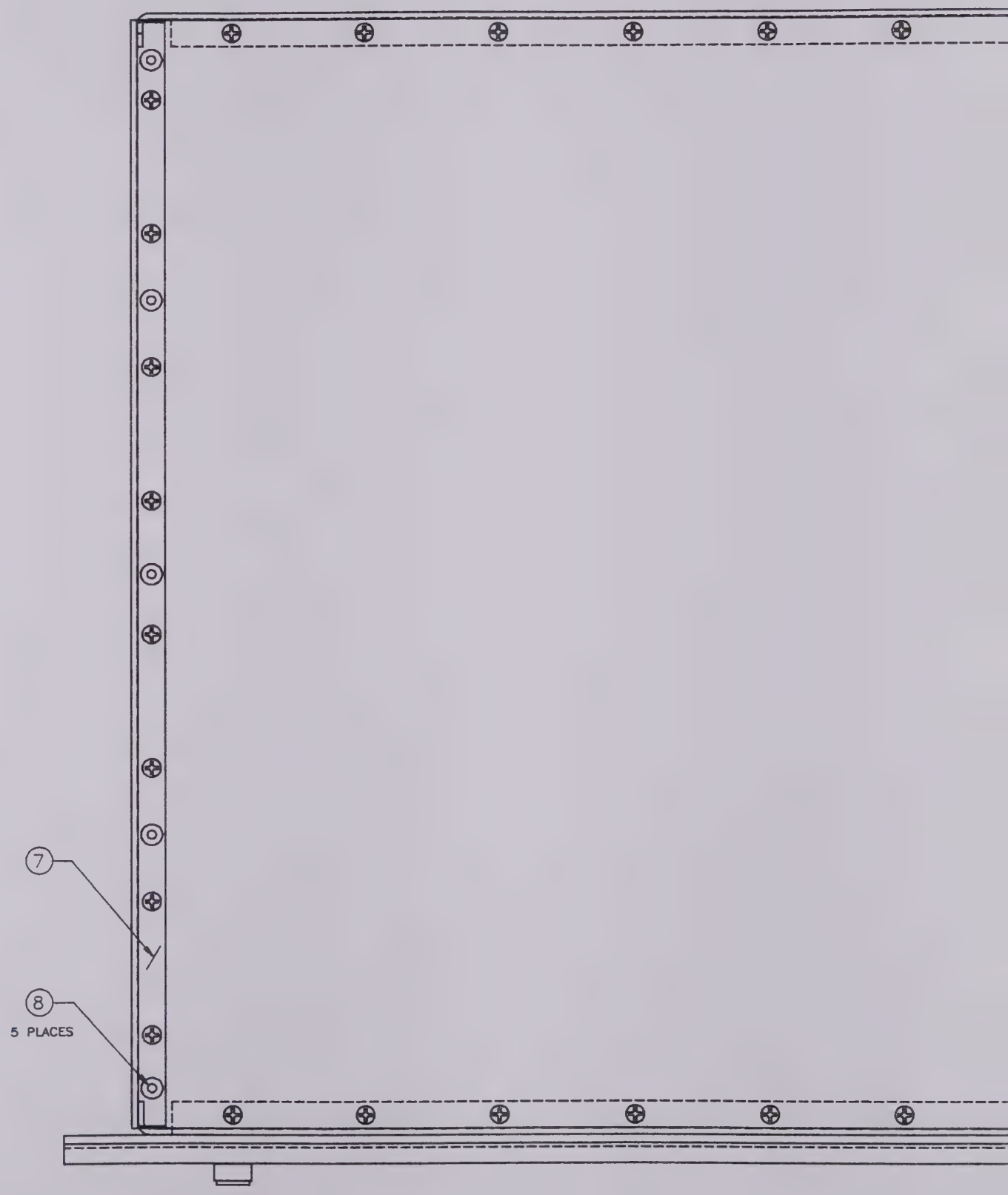

BOTTOM VIEW

ECN	DATE	REV
—	7AUG95	1
—	26SEP95	2
REL	12FEB96	—

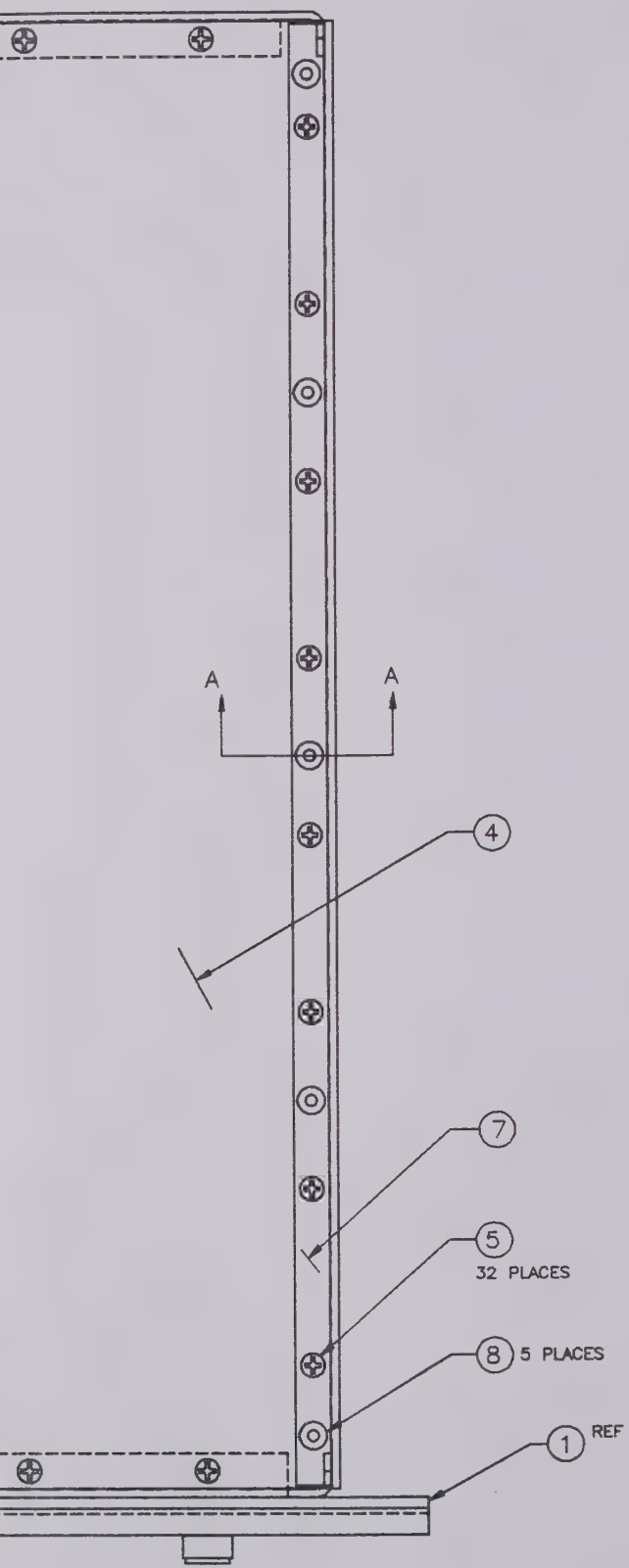

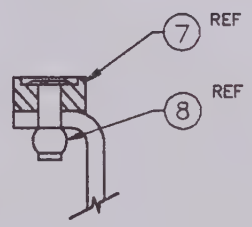

SECTION A–A
TYP 10 PLACES
SCALE=2/1

DWG. NO.			
1007696			
SCALE 1/1	SHEET 2	OF 2	REV. SEE SHT 1

BILL NO: 1007696-501 REV: B U/M: EA DRAWING NO: ARC-D\1007696
AMP ASSY

SEQ	PART NUMBER	REV	D E S C R I P T I O N	U/M	QUANTITY-PER	DRAWING NUMBER	REF-DSGN
0010	1007414	B	SCHEM DIAG,10S1G4	EA	REF	ARC-C\1007414	
0020	1007749	-	WIRE LIST	EA	REF	ARC-A\1007749	
0100	1007409-501	B	COMBINER ASSY,8 WAY	EA	1.000	ARC-C\1007409	A9
4200	1007738-504	A	CABLE ASSY,COAX,SEMI-RIGID,0.141 DIA,8.25"	EA	1.000	ARC-B\1007738	W4
4210	1007738-503	A	CABLE ASSY,COAX,SEMI-RIGID,0.141 DIA,8.00"	EA	1.000	ARC-B\1007738	W5
4220	1007738-502	A	CABLE ASSY,COAX,SEMI-RIGID,0.141 DIA,7.75"	EA	1.000	ARC-B\1007738	W6
4230	1007738-501	A	CABLE ASSY,COAX,SEMI-RIGID,0.141 DIA,7.50"	EA	1.000	ARC-B\1007738	W7
4240	1007738-508	-	CABLE ASSY,COAX,SEMI-RIGID,0.141 DIA,7.25"	EA	1.000	ARC-B\1007738	W8
4250	1007738-507	-	CABLE ASSY,COAX,SEMI-RIGID,0.141 DIA,7.00"	EA	1.000	ARC-B\1007738	W9
4260	1007738-506	-	CABLE ASSY,COAX,SEMI-RIGID,0.141 DIA,6.5"	EA	1.000	ARC-B\1007738	W10
4270	1007738-505	-	CABLE ASSY,COAX,SEMI-RIGID,0.141 DIA,6.50"	EA	1.000	ARC-B\1007738	W11
5000	1007697-501	-	PS ASSY	EA	1.000	ARC-D\1007697	1
5010	1007698-501	D	RF ASSY	EA	1.000	ARC-D\1007698	2
5020	1006732-101	A	PNL,TOP	EA	1.000	ARC-D\1006732	3
5030	1006733-101	B	PNL,BOT	EA	1.000	ARC-D\1006733	4
5040	11137		SCREW,MACH,PAN HD,CROSS-REC,S/ZN,6-32X.31,TYPE SW	EA	64.000		5
5050	11022		SCREW,MACH,PAN HD,CROSS-REC,S/S,6-32 X .75	EA	8.000	\MS51957-32	6
5060	1006761-101	-	GLIDE,CHASSIS	EA	2.000	ARC-C\1006761	7
5070	69120		RIVET,GRIP-TITE,A,1/8"DIA,1/8-1/4"MAT'L THK	EA	10.000	GRA\5X520	8
5080	12048		WASH,LOCK,SPLIT,S/S,#6	EA	18.000	\MS35338-136	9
5090	69238	-	BASE,MTG,CABLE TIE,ADH BACK,3/4 X 3/4	EA	A/R	TAB\TC-344A	10
5100	1007677-301	A	MTG BRKT ASSY,8-WAY COMBINER	EA	1.000	ARC-B\1007677	11
5110	13001		NUT,HEX,N,6-32,.312AF	EA	3.000	CJS\6-32 .312AF	12
5120	11016		SCREW,MACH,PAN HD,CROSS-REC,S/S,6-32 X .38	EA	7.000	\MS51957-28	13

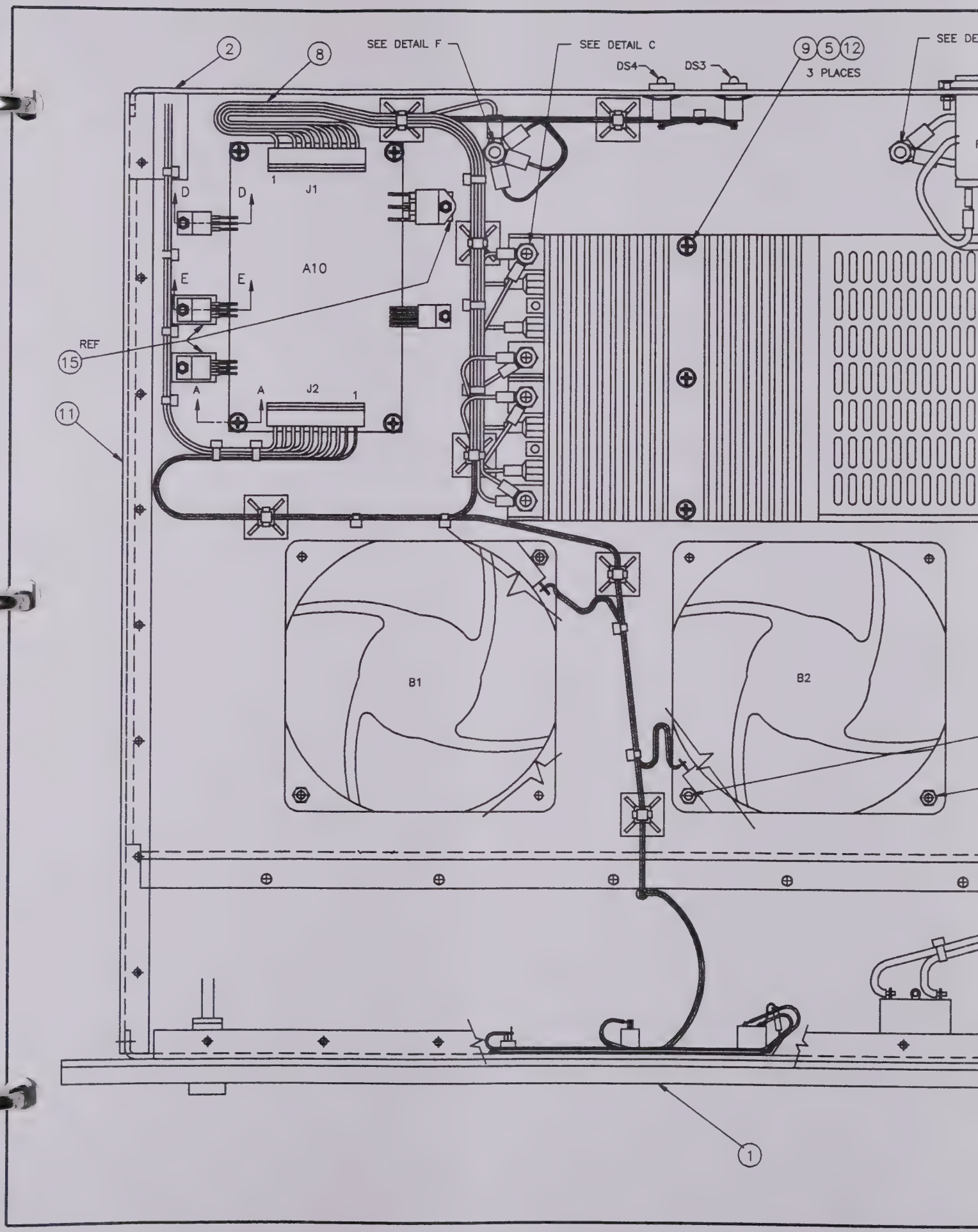
2
8
SEE DETAIL F
SEE DETAIL C
DS4
DS3
9
5
12
3 PLACES
SEE DE
1
J1
D
D
A10
E
E
REF
15
A
A
J2
1
11
B1
B2
1

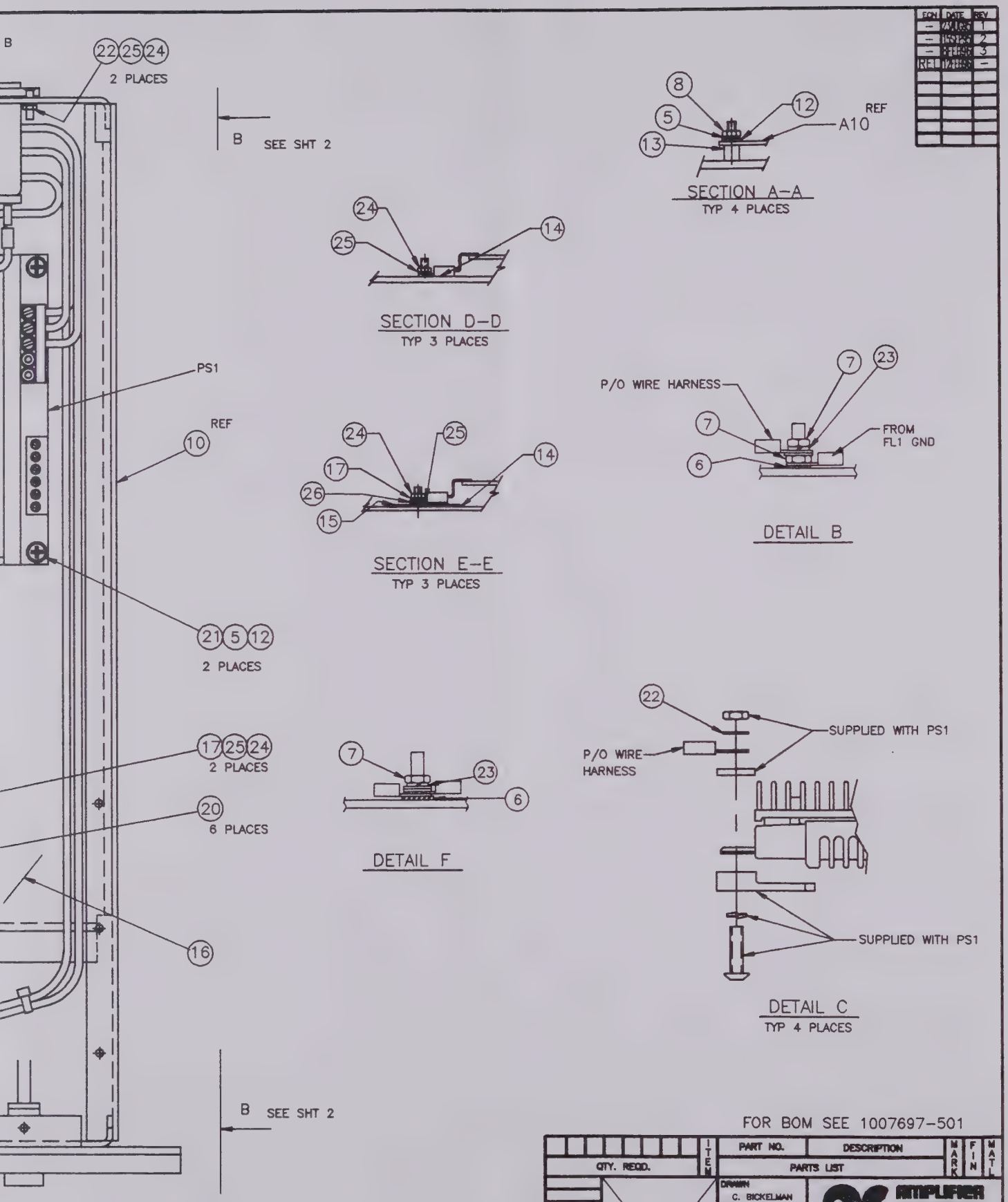

FOR BOM SEE 1007697-501

QTY. REQD.	ITEM	PART NO.	DESCRIPTION	MARK	FIN	MATL
		PARTS LIST				

DRAWN C. BICKELMAN DATE 11 JUL 96
CHKD C. BICKELMAN DATE 12 FEB 96
MECH DATE
ELEC DATE

AMPLIFIER RESEARCH

POWER SUPPLY ASSY

DWG. NO. 1007697

SCALE 1/1 SHEET 1 OF 2

USED ON MODEL 10S1G4

SHEET	1	2
REV	–	–

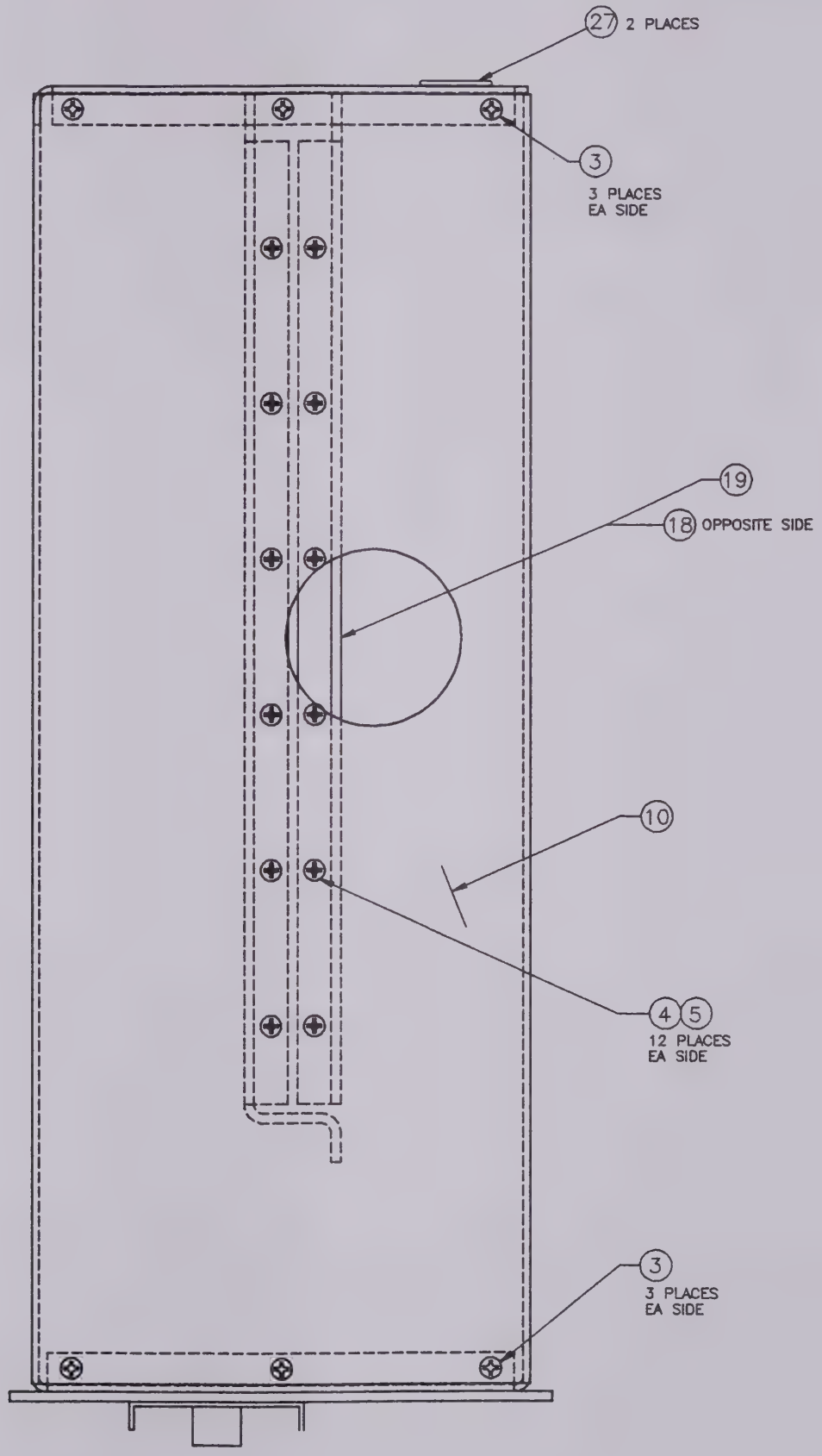

VIEW B–B

SEE SHEET 1

ECN	DATE	REV
—	[illegible]	1
—	[illegible]	2
REL	[illegible]	—

DWG. NO.
1007697

SCALE 1/1 | SHEET 2 OF 2 | REV. SEE SHT 1

BILL NO: 1007697-501 REV: - U/M: EA DRAWING NO: ARC-D\1007697
PS ASSY

SEQ	PART NUMBER	REV	D E S C R I P T I O N	U/M	QUANTITY-PER	DRAWING NUMBER	REF-DSGN
0010	1007414	B	SCHEM DIAG,10S1G4	EA	REF	ARC-C\1007414	
0100	1007736-501	-	PWB ASSY,REG/FAULT BD	EA	1.000	ARC-B\1007736	A10
0200	37020	-	FAN,AXIAL,24 VDC,106 CFM,	EA	2.000	PAM\4124KX	B1 ,B2
1000	33003		LED,RED,T1 3/4(5mm)	EA	2.000	H-P\HLMP-3001-009	DS3 ,DS4
1300	35025		FUSE,SLO BLO,TYPE T,METRIC,4A,250V	EA	2.000	LIF\218004	F1 ,F2
1400	35083		FILT,LINE,6A,VDE,FUSED	EA	1.000	COR\6EGG1-2	FL1
2400	25052	-	PS,SWNG,115/230VAC,AUTO,24VDC,6A,24VDC,2A	EA	1.000	V-C\VI-PA33-EVY	PS1
5000	1007391-501	C	CTRL PNL ASSY	EA	1.000	ARC-D\1007391	1
5010	1007410-301-M1	B	PNL ASSY,REAR	EA	1.000	ARC-D\1007410	2
5020	11137		SCREW,MACH,PAN HD,CROSS-REC,S/ZN,6-32X.31,TYPE SW	EA	12.000		3
5030	11016		SCREW,MACH,PAN HD,CROSS-REC,S/S,6-32 X .38	EA	24.000	\MS51957-28	4
5040	12048		WASH,LOCK,SPLIT,S/S,#6	EA	33.000	\MS35338-136	5
5050	12059		WASH,LOCK,EXT TOOTH,S/S,#10	EA	2.000	\MS35335-60	6
5060	13007		NUT,HEX,S/S,10-32,.343AF	EA	3.000		7
5070	1007748-501	-	HARNESS ASSY	EA	1.000		8
5080	11025		SCREW,MACH,PAN HD,CROSS-REC,S/S,6-32 X 1.50	EA	3.000	\MS51957-36	9
5090	1006731-101	B	PNL,SIDE,LEFT	EA	1.000	ARC-D\1006731	10
5100	1006730-101	B	PNL,SIDE,RT	EA	1.000	ARC-D\1006730	11
5110	12011		WASH,FLAT,S/S,#6,.312 OD X .156 ID X .035 THK	EA	7.000	\MS15795-805	12
5120	14018		SPACER,HEX,THD,F,B W/NI,1/4 HEX X 1/4 LG X 6-32	EA	4.000	KEY\1451A	13
5130	77064		COMPOUND,THERMAL JOINT,TYPE 120	OZ	A/R	WAK\120-S	14
5140	69090		INSUL,HD ANODIZED,TYPE TO-220,.950 L,.500 W	EA	3.000	THM\4777A	15
5150	1007699-301	B	CHASSIS	EA	1.000	ARC-D\1007699	16
5160	12010		WASH,FLAT,S/S,#4,.250 OD X .125 ID X .022 THK	EA	5.000	\MS15795-803	17

BILL NO: 1007697-501 REV: - U/M: EA DRAWING NO: ARC-D\1007697
PS ASSY

SEQ	PART NUMBER	REV	D E S C R I P T I O N	U/M	QUANTITY-PER	DRAWING NUMBER	REF-DSGN
5170	1007707-301	A	BRKT,MTG,RT,RF ASSY	EA	1.000	ARC-C\1007707	18
5180	1007708-301	A	BRKT,MTG,LEFT,RF ASSY	EA	1.000	ARC-C\1007708	19
5190	13024		NUT,SELF-LOCK,HEX,REG HT,NYLON INSERT,S/S,4-40	EA	6.000	\MS21044C04	20
5200	11133		SCREW,MACH,PAN HD,C/R,S/S,6-32 X .875	EA	2.000	\MS51957-33	21
5210	11103		SCREW,MACH,FLT HD,100 DEG,CROSS-REC,S/S,4-40X.50	EA	2.000	\MS24693-C6	22
5220	12050		WASH,LOCK,SPLIT,S/S,#10	EA	2.000	\MS35338-138	23
5230	13003		NUT,HEX,S/S,4-40,.187AF	EA	9.000		24
5240	12047		WASH,LOCK,SPLIT,S/S,#4	EA	9.000	\MS35338-135	25
5250	12037		WASH,SHLDR,N,.232 OD X .115 ID X .047 SHLD.THK.	EA	3.000	REL\NY-04-040	26
5260	69111		PLUG,HOLE,METAL,5/8"DIA HOLE,13/16"O/A DIA	EA	2.000	HHS\654	27

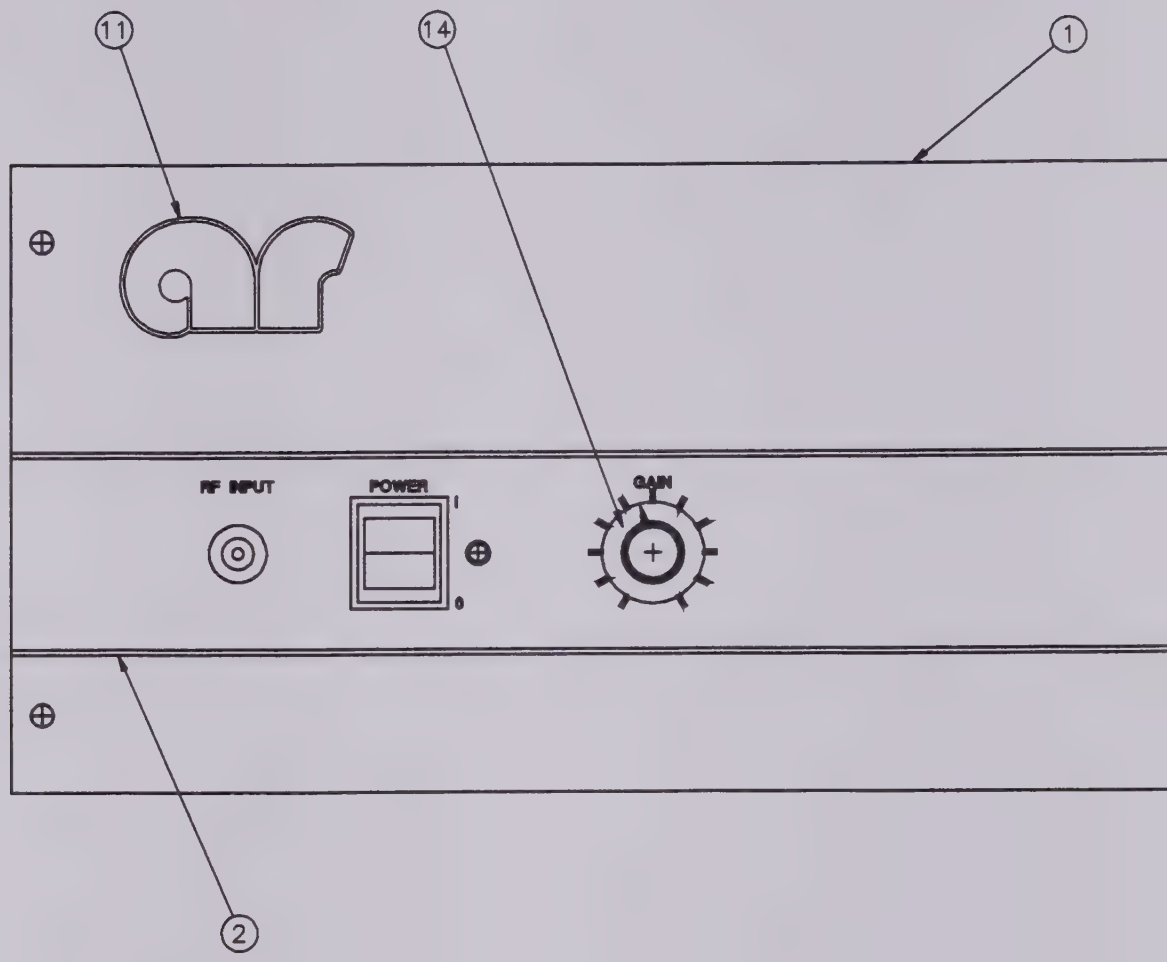
11
14
1
RF INPUT
POWER
1
0
GAIN
2

ECN	DATE	REV
—	[illegible]	1
REL	[illegible]	—
[illegible]	[illegible]	A
[illegible]	[illegible]	B

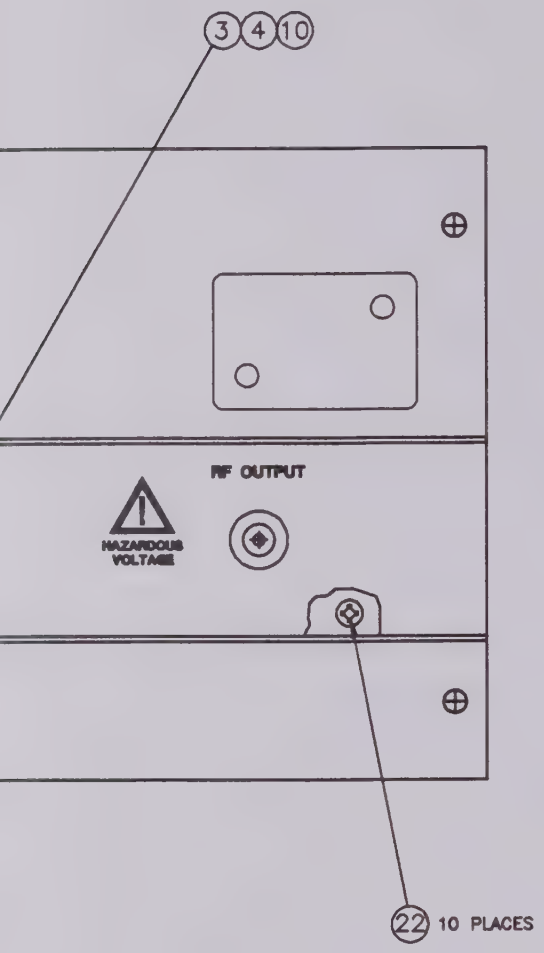

FOR BOM SEE 1007391-501

QTY. REQD.	ITEM	PART NO.	DESCRIPTION	MARK	FIN	MATL
		PARTS LIST				

UNLESS OTHERWISE SPECIFIED
DO NOT SCALE DRAWING
DIMENSIONS ARE IN INCHES AND INCLUDE PLATING THICKNESS
ALL THREADS ARE UNIFIED NATIONAL SERIES, CLASS 2
REMOVE ALL BURRS AND SHARP EDGES

BASIC DIMENSIONS	2 PLACE DECIMALS	3 PLACE DECIMALS
UP TO 6	±.02	±.005
ABOVE 6 TO 24	±.05	±.010
ABOVE 24	±.05	±.010

ANGULAR DIMENSIONS 1/2°

DRAWN C. BICKELMAN DATE 10 FEB 95
CHKD C. BICKELMAN DATE 12 FEB 95
MECH J. MAGINN DATE 1 MAR 95
ELEC J. BANKERT DATE 28 FEB 95

AMPLIFIER RESEARCH

CTRL PNL ASSY

DWG NO. 1007391

SCALE 1/1 SHEET 1 OF 2 REV SEE BLOCK

10S194 USED ON MODEL

SHEET	1	2
REV	B	B

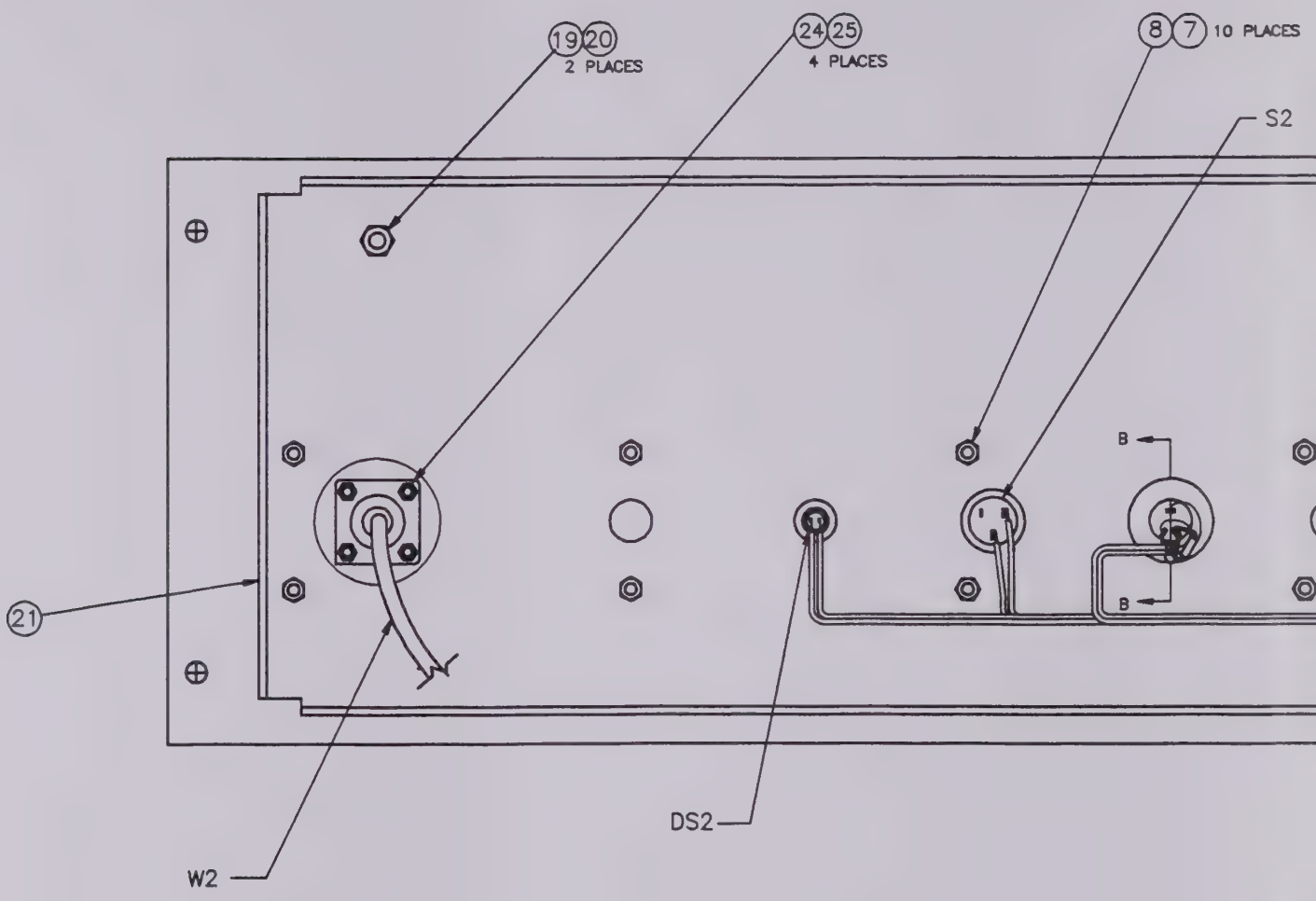
19 20
2 PLACES
24 25
4 PLACES
8 7 10 PLACES
S2
B
B
21
DS2
W2

ECN	DATE	REV
[illegible]	[illegible]	[illegible]
[illegible]	[illegible]	[illegible]
[illegible]	[illegible]	A
[illegible]	[illegible]	B

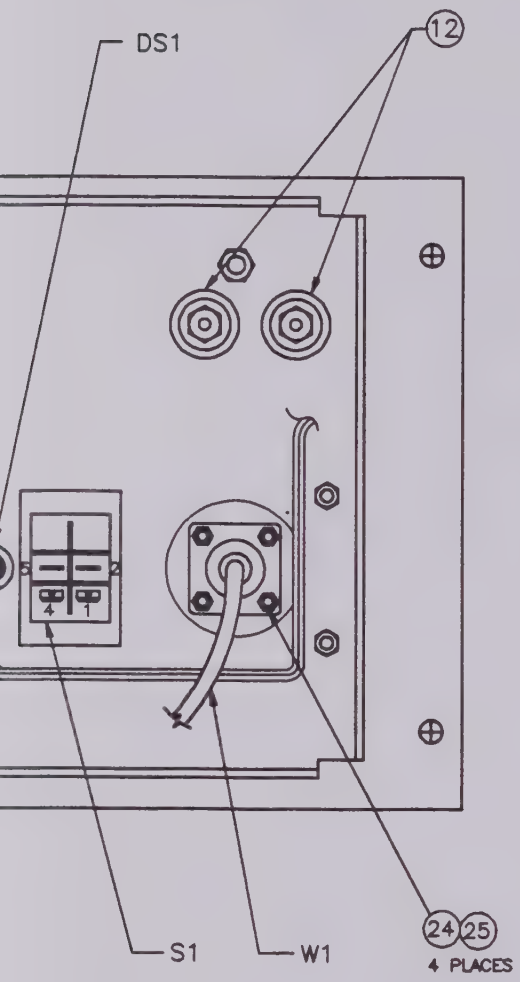

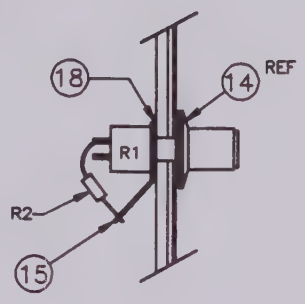

SECTION B–B

DWG. NO.			
1007391			
SCALE 1/1	SHEET 2	OF 2	REV. SEE SHT 1

AMPLIFIER RESEARCH

14:18:11 17 SEP 1996 * * * SINGLE LEVEL BILL OF MATERIAL LISTING * * * REPORT: E0056 PAGE: 1

BILL NO: 1007391-501 REV: C U/M: EA DRAWING NO: ARC-D\1007391
CTRL PNL ASSY

SEQ	PART NUMBER	REV	D E S C R I P T I O N	U/M	QUANTITY-PER	DRAWING NUMBER	REF-DSGN
0010	1007414	B	SCHEM DIAG,10S1G4	EA	REF	ARC-C\1007414	
1000	33010		LED,RED/GRN,T13/4(5MM)	EA	2.000	H-P\HLMP4000-009	DS1 ,DS2
2700	55901	-	RES,VAR,CP,10K,10%,1/2W	EA	1.000	CLA\RV6NAYSA103A	R1
2710	55612-1212F		RES,FXD,METAL FILM,12.1K,5%,1/4-1/2W	EA	1.000		R2
3100	57085	-	SW,ROCKER,NON-LIGHTED,DPST,BLK	EA	1.000	CAR\RGSEC701RBB0	S1
3110	57029		SW,PB,MOM,SPST(N.O.)	EA	1.000	A-S\MSPS-103C-2	S2
4200	20390	-	CABLE ASSY,COAX,RG-142B/U,N-BLKD,SMA,18.0"	EA	1.000	ARC-A\1002494	W1
4210	20393	-	CABLE ASSY,COAX,SEMI-RIGID,N,BLKD,N,7.0"	EA	1.000	ARC-A\1002494	W2
5000	1006728-301-F1	E	PNL,CTRL	EA	1.000	ARC-D\1006728	1
5010	1006726-101-F2	B	CHANNEL,TRIM	EA	1.000	ARC-D\1006726	2
5020	1007384-101-F6-M1	-	PNL,TRIM	EA	1.000	ARC-D\1007384	3
5030	69241		TAPE,TRANSPARENT,ACRYLIC ADH,2 SIDES,.004 THK	IN	A/R	CMP\M69	4
5060	13004		NUT,HEX,S/S,6-32,.250AF	EA	10.000		7
5070	12057		WASH,LOCK,EXT TOOTH,S/S,#6	EA	10.000	\MS35335-58	8
5090	77067		ADH,CLEAR,RTV,1 TOUCH	OZ	A/R	G-E\GE108	10
5100	1006659-101		LOGO,DIECAST,1.25	EA	1.000	ARC-B\1006659	11
5110	14048	-	FASTENER,PALNUT,WASH TYPE,SELF THDG,.125 DIA	EA	2.000	MCS\90533A131	12
5130	69018		KNOB,SKIRTED,1/8"SHAFT,MATTE FINISH	EA	1.000	ROG\MF-RB-67-0SK7M	14
5140	69242		LUG,SHAKEPROOF,13/16 L,#1/4 STUD,DUAL HOLE	EA	1.000	HHS\1410-14	15
5170	12060		WASH,LOCK,EXT TOOTH,S/S,#1/4	EA	1.000	\MS35335-61	18
5180	12050		WASH,LOCK,SPLIT,S/S,#10	EA	2.000	\MS35338-138	19
5190	13007		NUT,HEX,S/S,10-32,.343AF	EA	2.000		20
5200	1006729-101	D	PNL,FRONT	EA	1.000	ARC-D\1006729	21
5210	11065		SCREW,MACH,FLT HD,100 DEG,CROSS-REC,S/S,6-32 X .50	EA	10.000	\MS24693-C28	22

BILL NO: 1007391-501 REV: C U/M: EA DRAWING NO: ARC-D\1007391
CTRL PNL ASSY

SEQ	PART NUMBER	REV	D E S C R I P T I O N	U/M	QUANTITY-PER DRAWING NUMBER	REF-DSGN
5230	13003		NUT,HEX,S/S,4-40,.187AF	EA	8.000	24
5240	12047		WASH,LOCK,SPLIT,S/S,#4	EA	8.000 \MS35338-135	25

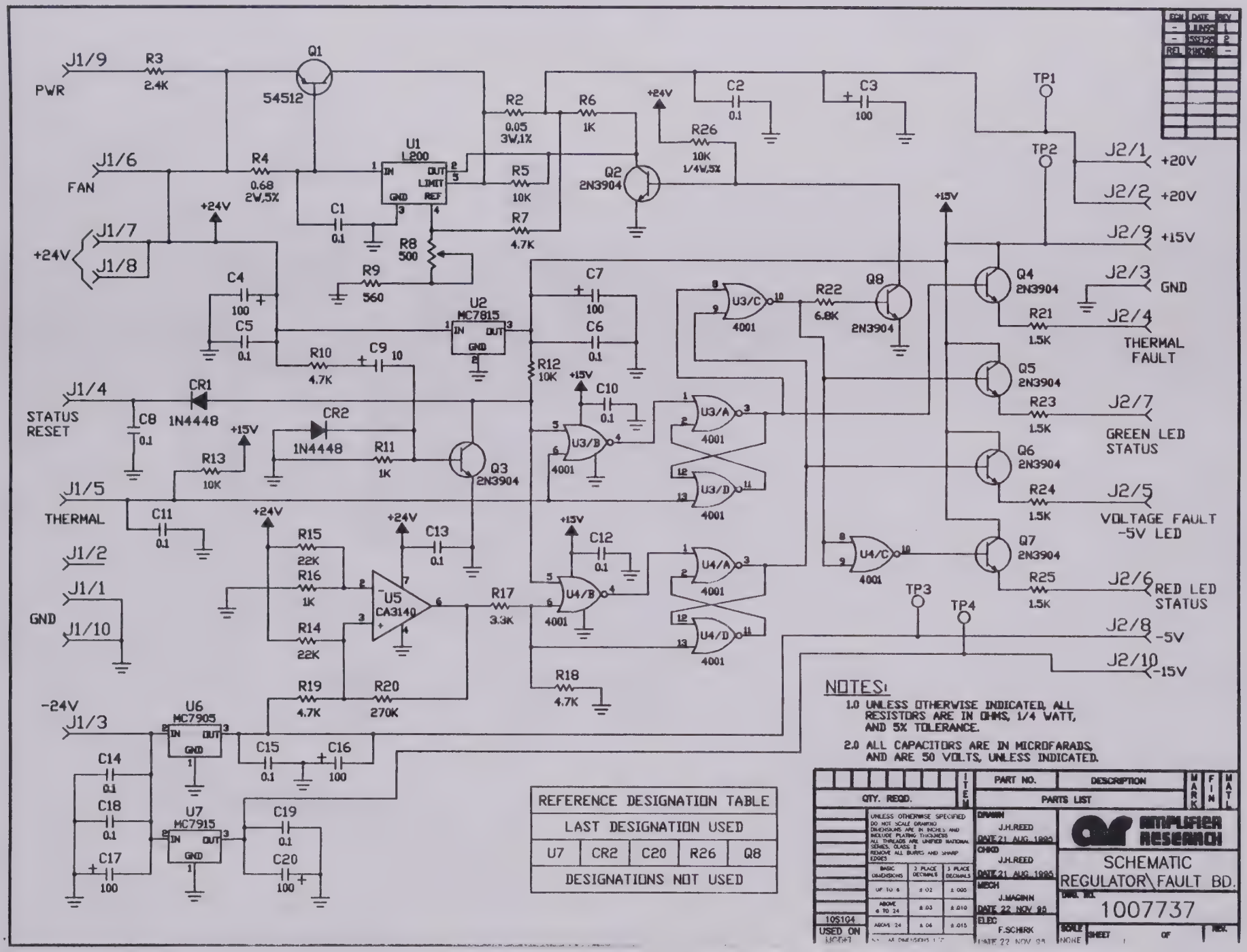

NOTES:

1.0 UNLESS OTHERWISE INDICATED, ALL RESISTORS ARE IN OHMS, 1/4 WATT, AND 5% TOLERANCE.

2.0 ALL CAPACITORS ARE IN MICROFARADS, AND ARE 50 VOLTS, UNLESS INDICATED.

REFERENCE DESIGNATION TABLE				
LAST DESIGNATION USED				
U7	CR2	C20	R26	Q8
DESIGNATIONS NOT USED				

QTY. REQD.	ITEM	PART NO.	DESCRIPTION	MARK	FIN	MATL
		PARTS LIST				

UNLESS OTHERWISE SPECIFIED DO NOT SCALE DRAWING DIMENSIONS ARE IN INCHES AND INCLUDE PLATING THICKNESS ALL THREADS ARE UNIFIED NATIONAL SERIES, CLASS 2 REMOVE ALL BURRS AND SHARP EDGES

BASIC DIMENSIONS	2 PLACE DECIMALS	3 PLACE DECIMALS
UP TO 6	± .02	± .005
ABOVE 6 TO 24	± .03	± .010
ABOVE 24	± .06	± .015

10S104
USED ON

DRAWN J.H.REED DATE 21 AUG. 1995
CHKD J.H.REED DATE 21 AUG. 1995
MECH J.MAGINN DATE 22 NOV 95
ELEC F.SCHIRK DATE 22 NOV 95

AMPLIFIER RESEARCH

SCHEMATIC
REGULATOR\FAULT BD.

DWG. NO. 1007737

SCALE NONE SHEET OF REV.

ECN	DATE	REV
–	7 JUL 95	1
–	[illegible]	2
REL	[illegible]	–

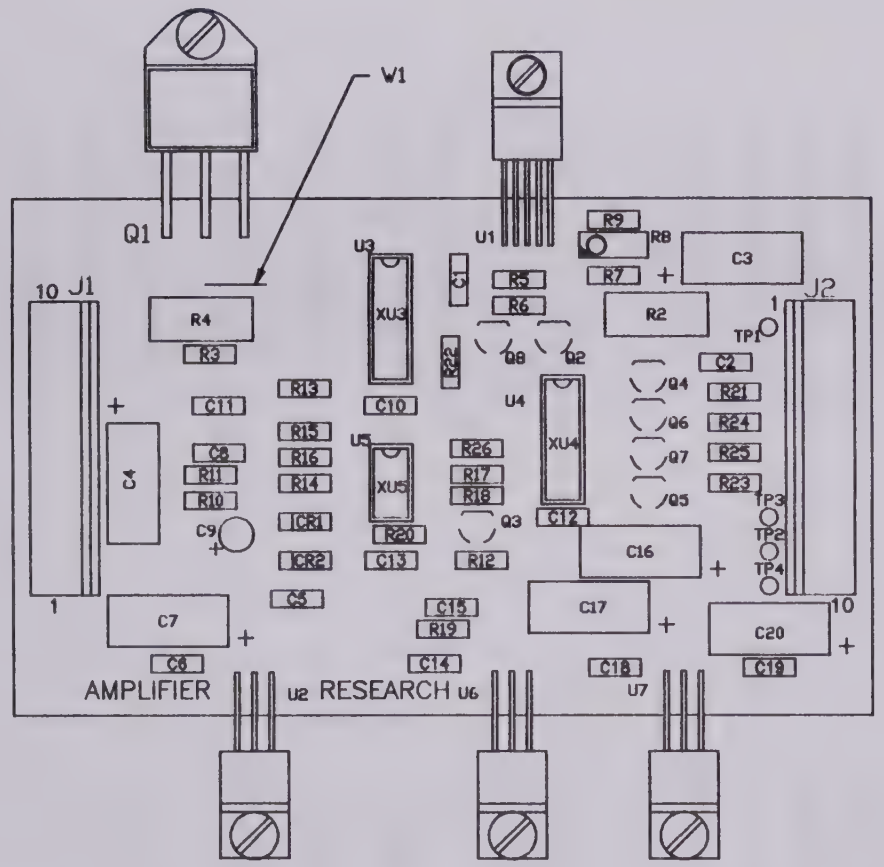

NOTE:

1. Q1,U1,U2,U6, AND U7 ARE INSTALLED AT POWER SUPPLY ASSEMBLY LEVEL.

QTY. REQD.	ITEM	PART NO.	DESCRIPTION	MARK	FIN	MAT'L
		PARTS LIST				

UNLESS OTHERWISE SPECIFIED
DO NOT SCALE DRAWING
DIMENSIONS ARE IN INCHES AND INCLUDE PLATING THICKNESS
ALL THREADS ARE UNIFIED NATIONAL SERIES, CLASS 2
REMOVE ALL BURRS AND SHARP EDGES

BASIC DIMENSIONS	2 PLACE DECIMALS	3 PLACE DECIMALS
UP TO 6	±.02	±.005
ABOVE 6 TO 24	±.03	±.010
ABOVE 24	±.06	±.015

NONLINEAR DIMENSIONS 1/2

DRAWN J.H.REED DATE 21 AUG. 1995
CHKD J.H.REED DATE 21 AUG. 1995
MECH J.MAGINN DATE 22 NOV 95
ELEC F.SCHIRK DATE 22 NOV 95

AMPLIFIER RESEARCH

ASSEMBLY DRAWING
REGULATOR/FAULT

DWG. NO. 1007736

SCALE NONE SHEET 1 OF 1 REV. —

10S104
USED ON
1A30e1

BILL NO: 1007736-501 REV: - U/M: EA DRAWING NO: ARC-B\1007736
PWB ASSY,REG/FAULT BD

SEQ	PART NUMBER	REV	DESCRIPTION	U/M	QUANTITY-PER	DRAWING NUMBER	REF-DSGN
0010	1007737	-	SCHEM DIAG,REG/FAULT BD	EA	REF	ARC-B\1007737	
0400	27236		CAPR,FXD,DIP SPACED CER,.1UF,50VDC	EA	13.000	AVX\MD015C104MAA	C1 ,C2 C5 ,C6 C8 ,C10 C11 ,C12 C13 ,C14 C15 ,C18 C19
0410	27068		CAPR,ELECT,100uF,50VDC,AXIAL	EA	6.000	PAN\ECEB1HU101	C3 ,C4 C7 ,C16 C17 ,C20
0420	27059		CAPR,ELECT,10uF,50V,+/-20%,RADIAL	EA	1.000	PAN\ECEA1HU100	C9
0700	1N4448		DIODE,SIGNAL,75V PIV	EA	2.000	FCH\1N4448	CR1 ,CR2
1500	41084		CONN,LOCKING HEADER,STR,10 PIN,SQR POSTS	EA	2.000	PNT\MLSS156-10-L	J1 ,J2
2500	54512		XSTR,SWNG,PNP,100V,25A,125W	EA	1.000	TII\TIP-36C	Q1
2510	2N3904		XSTR,SWNG,NPN,40V,0.2A,1W	EA	7.000		Q2 ,Q3 Q4 ,Q5 Q6 ,Q7 Q8
2710	55616-R050F		RES,FXD,PRECISION,.05,1%,3W	EA	1.000	RCL\ LOB-3-0.05-1%	R2
2720	55612-2401J		RES,FXD,METAL FILM,2.4K,5%,1/4-/12W	EA	1.000	TRW\GP55-2401+/-5%	R3
2730	55715-R680J		RES,FXD,WW,0.68,5%,2W,TYPE SPH	EA	1.000		R4
2740	55612-1002J		RES,FXD,METAL FILM,10K,5%,1/4-1/2W	EA	4.000	TRW\GP55-1002+/-5%	R5 ,R12 R13 ,R26
2750	55612-1001J		RES,FXD,METAL FILM,1K,5%,1/4-1/2W	EA	3.000	TRW\GP55-1001+/-5%	R6 ,R11 R16
2760	55612-4701J		RES,FXD,METAL FILM,4.7K,5%,1/4-1/2W	EA	4.000	TRW\GP55-4701+/-5%	R7 ,R10 R18 ,R19
2770	55916		RES,VAR,CERMET,MULTITURN,TOP ADJ,500,10%,1W	EA	1.000	MEP\8024EKW-501	R8
2780	55612-5600J		RES,FXD,METAL FILM,560,5%,1/4-1/2W	EA	1.000	TRW\GP55-5600+/-5%	R9
2790	55612-2202J		RES,FXD,METAL FILM,22K,5%,1/4-1/2W	EA	2.000	TRW\GP55-2202+/-5%	R14 ,R15

BILL NO: 1007736-501 REV: - U/M: EA DRAWING NO: ARC-B\1007736
PWB ASSY,REG/FAULT BD

SEQ	PART NUMBER	REV	D E S C R I P T I O N	U/M	QUANTITY	PER	DRAWING NUMBER	REF-DSGN
2795	55612-3301J		RES,FXD,METAL FILM,3.3K,5%,1/4-1/2W	EA	1.000		TRW\GP55-3301+/-5%	R17
2800	55612-2703J		RES,FXD,METAL FILM,270K,5%,1/4-1/2W	EA	1.000		TRW\GP55-2703+/-5%	R20
2810	55612-1501J		RES,FXD,METAL FILM,1.5K,5%,1/4-1/2W	EA	4.000		TRW\GP55-1501+/-5%	R21 ,R23 R24 ,R25
2820	55612-6801J		RES,FXD,METAL FILM,6.8K,5%,1/4-1/2W	EA	1.000		TRW\GP55-6801+/-5%	R22
3700	60033		INTEGRATED CKT,LINEAR,POS.,ADJ.V,2A	EA	1.000		SGS\L200CV	U1
3710	60046		INTEGRATED CKT,3 TERM,POS REG.	EA	1.000		MOT\MC7815CT	U2
3720	60052		INTEGRATED CKT,QUAD 2-INPUT NOR GATE	EA	2.000		MOT\MC4001BCP	U3 ,U4
3730	60009		INTEGRATED CKT,LINEAR,OP.AMP.	EA	1.000		RCA\CA3140AE	U5
3740	60066		IC,3 TERM,NEG REG	EA	1.000		MOT\MC7905CT	U6
3750	60048		INTEGRATED CKT,3 TERM,NEG REG.	EA	1.000		MOT\MC7915CT	U7
4200	66035		WIRE,TFE,22 AWG,SOLID WHT	IN	A/R		WEI\2822	W1
4500	73013		SOCKET,I.C.,14 PIN	EA	2.000		TII\C93-14-02	XU3 ,XU4
4510	73010		SOCKET,I.C.,8 PIN,DIP	EA	1.000		TII\C93-08-02	XU5
5000	1007459-101	A	PWB,REG/FAULT BD	EA	1.000		ARC-B\1007459	1

AMPLIFIER RESEARCH

14:18:13 17 SEP 1996 * * * SINGLE LEVEL BILL OF MATERIAL LISTING * * * REPORT: E0056 PAGE: 1

BILL NO: 1007748-501 REV: - U/M: EA DRAWING NO:
HARNESS ASSY

SEQ	PART NUMBER	REV	D E S C R I P T I O N	U/M	QUANTITY-PER	DRAWING NUMBER	REF-DSGN
0010	1007749	-	WIRE LIST	EA	REF	ARC-A\1007749	
0020	1007678-101	-	HARNESS BD	EA	REF		
2200	41075		CONN,PLUG,6 PIN,(F)	EA	1.000	PNT\CT156F22-6-C	P1
2210	41060		CONN,THRU COVER,6 PIN	EA	1.000	PNT\TC156F-6-C	P1
2220	41074		CONN,PLUG,3 PIN(F)	EA	1.000	PNT\CT156F22-3-C	P2
2230	41059		CONN,THRU COVER,3 PIN	EA	1.000	PNT\TC156F-3-C	P2
2240	41076		CONN,PLUG,10 PIN,(F)	EA	2.000	PNT\CT156F22-10-T	P3 ,P4
2250	41061		CONN,THRU COVER,10 PIN	EA	2.000	PNT\TC156F-10-L	P3 ,P4
5000	69323		TERM,INSUL,PUSH-ON,F,22-18 AWG,.020 X .110 TAB	EA	4.000	TAB\RA18-111F	
5010	69136		TERM,INSUL,PUSH-ON,F,16-14 AWG,.032 X .250 TAB	EA	4.000	TAB\RB-257	
5020	69137		TERM,INSUL,PUSH-ON,F,22-18 AWG,.032 X .250 TAB	EA	2.000	TAB\RA-257	
5030	69142		TERM,RING,INSUL,#10 STUD,22-16 AWG	EA	7.000	TAB\RA-877	
5040	69145		TERM,RING,INSUL,#10 STUD,16-14 AWG	EA	2.000	TAB\RB-877	
5050	66127		TUBING,PVC,BLK,.263 ID,.020 WALL THK	IN	21.000		
5060	69162		CABLE TIES,7/8 MAX BUNDLE DIA,4 L	EA	A/R	DEN\08432	
5070	66169		WIRE,TFE,14 AWG,19 STRAND,TYPE E,GRY	IN	A/R		
5080	66168		WIRE,TFE,14 AWG,19 STRAND,TYPE E,WHT	IN	A/R		
5085	66009		WIRE,TFE,16 AWG,STRANDED,TYPE E,BLK	IN	A/R		
5090	66025		WIRE,TFE,22 AWG,STRANDED,TYPE E,BLK	IN	A/R		
5100	66082		WIRE,TFE,22 AWG,STRANDED,TYPE E,WHT/GRN	IN	A/R		
5110	66077		WIRE,TFE,22 AWG,STRANDED,TYPE E,WHT/BLK	IN	A/R		
5120	66032		WIRE,TFE,22 AWG,STRANDED,TYPE E,VIO	IN	A/R		
5130	66034		WIRE,TFE,22 AWG,STRANDED,TYPE E,WHT	IN	A/R		
5140	66031		WIRE,TFE,22 AWG,STRANDED,TYPE E,BLU	IN	A/R		

BILL NO: 1007748-501 REV: - U/M: EA DRAWING NO:
HARNESS ASSY

SEQ	PART NUMBER	REV	D E S C R I P T I O N	U/M	QUANTITY-PER DRAWING NUMBER	REF-DSGN
5150	66030		WIRE,TFE,22 AWG,STRANDED,TYPE E,GRN	IN	A/R	
5160	66027		WIRE,TFE,22 AWG,STRANDED,TYPE E,RED	IN	A/R	
5170	66080		WIRE,TFE,22 AWG,STRANDED,TYPE E,WHT/ORG	IN	A/R	
5180	66079		WIRE,TFE,22 AWG,STRANDED,TYPE E,WHT/RED	IN	A/R	
5190	66083		WIRE,TFE,22 AWG,STRANDED,TYPE E,WHT/VIO	IN	A/R	
5200	66186		WIRE,PVC,14 AWG,STANDED (50/30),GRN/YEL	IN	A/R	
5210	66028		WIRE,TFE,22 AWG,STRANDED,TYPE E,ORN	IN	A/R	

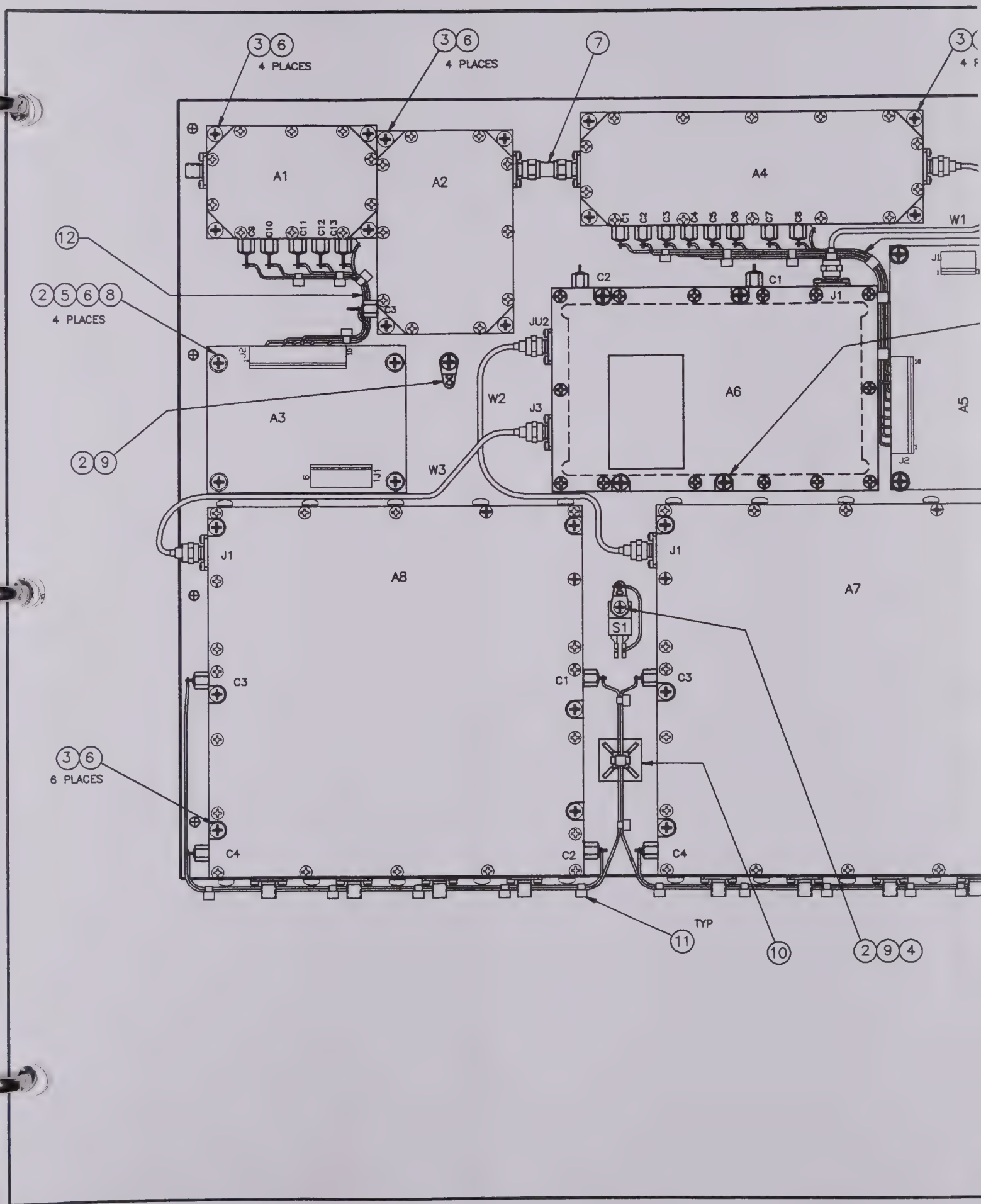

3 6
4 PLACES
3 6
4 PLACES
7
A1
A2
A4
C8
C10
C11
C12
C13
C1
C2
C3
C4
C5
C6
C7
C8
W1
12
2 5 6 8
4 PLACES
C3
C2
C1
J1
JU2
J2
A3
W2
J3
A6
A5
2 9
W3
J1
J2
J1
A8
A7
S1
C3
C1
C3
3 6
6 PLACES
C4
C2
C4
TYP
11
10
2 9 4

ECN	DATE	REV
—	[illegible]	1
REL	[illegible]	—
[illegible]	[illegible]	A
[illegible]	[illegible]	B

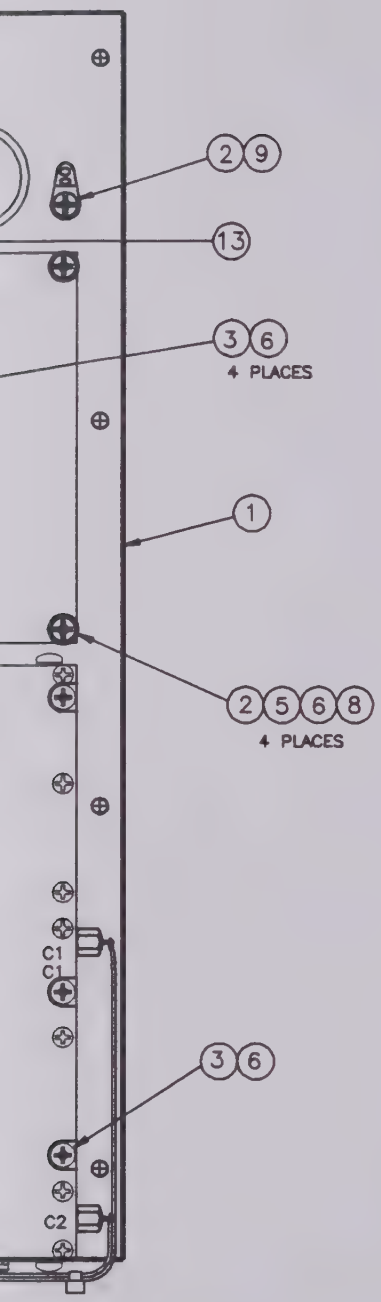

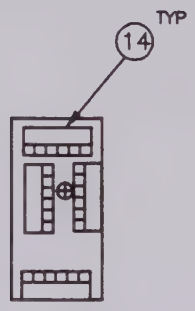

VIEW B–B

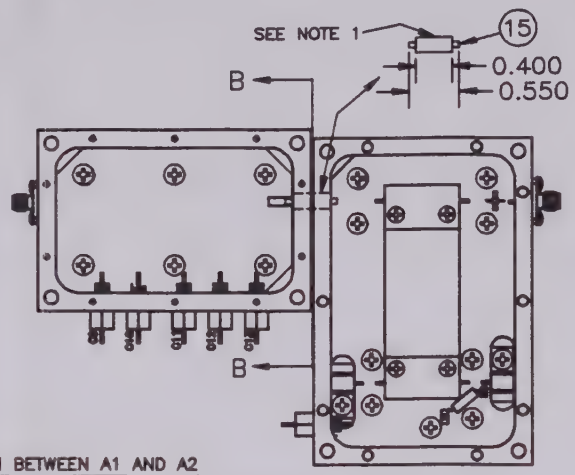

DETAIL SHOWING CONNECTION BETWEEN A1 AND A2

NOTE 1: ITEM IS EXCESS TEFLON FROM 41185 SMA CONNECTOR

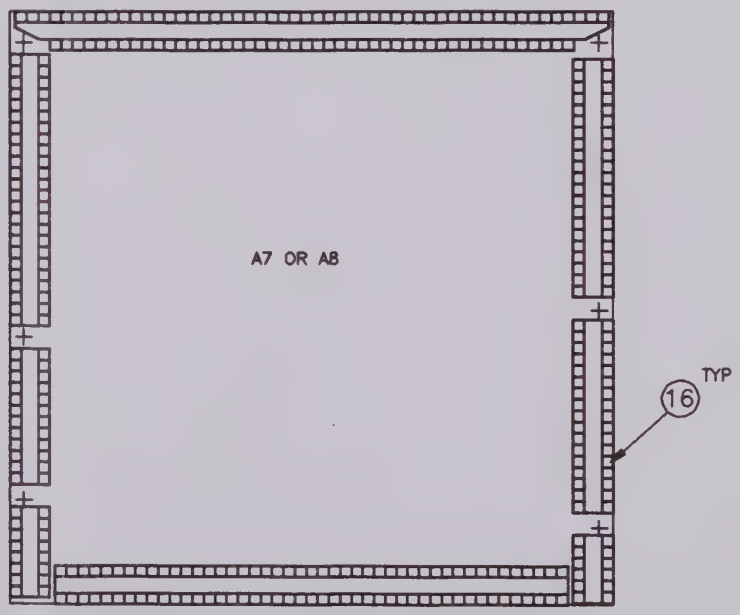

BOTTOM VIEW OF A7 OR A8 SHOWING POSITION OF ITEM 16

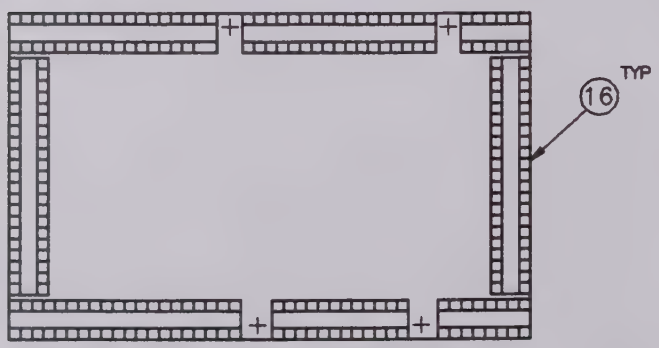

BOTTOM VIEW OF A6 SHOWING POSITION OF ITEM 16

FOR BOM SEE 1007698–501

QTY. REQD.	ITEM	PART NO.	DESCRIPTION	MARK	FIN	MAT'L
		PARTS LIST				

UNLESS OTHERWISE SPECIFIED DO NOT SCALE DRAWING DIMENSIONS ARE IN INCHES AND INCLUDE PLATING THICKNESS ALL THREADS ARE UNIFIED NATIONAL SERIES, CLASS 2 REMOVE ALL BURRS AND SHARP EDGES

BASIC DIMENSIONS	2 PLACE DECIMALS	3 PLACE DECIMALS
UP TO 6	±.02	±.005
ABOVE 6 TO 24	±.03	±.010
ABOVE 24	±.06	±.015
ANGULAR DIMENSIONS 1/2°		

DRAWN C. BICKELMAN DATE 10 JUL 95
CHKD C. BICKELMAN DATE 10 JUL 95
MECH J. MAGINN DATE 30 NOV 96
ELEC F. SCHIRK DATE 30 NOV 96

AMPLIFIER RESEARCH

RF ASSY

DWG. NO. 1007698

SCALE 1/1 SHEET 1 OF 1 REV. B

103104 USED ON MODEL

AMPLIFIER RESEARCH

14:18:14 17 SEP 1996 * * * SINGLE LEVEL BILL OF MATERIAL LISTING * * * REPORT: E0056 PAGE: 1

BILL NO: 1007698-501 REV: D U/M: EA DRAWING NO: ARC-D\1007698
RF ASSY

SEQ	PART NUMBER	REV	D E S C R I P T I O N	U/M	QUANTITY-PER	DRAWING NUMBER	REF-DSGN
0100	1007451-501	B	PWB ASSY,VAR GAIN AMP	EA	1.000	ARC-B\1007451	A1
0110	1007401-501	C	PWB ASSY,SPLITTER/DETR	EA	1.000	ARC-C\1007401	A2
0120	1007454-501	D	PWB ASSY,LINEARIZER/CTRL BD	EA	1.000	ARC-B\1007454	A3
0130	1007472-501	B	PWB ASSY,1 WATT AMP	EA	1.000	ARC-C\1007472	A4
0140	1007504-501	A	PWB ASSY,BIAS CTRL,1 WATT AMP	EA	1.000	ARC-B\1007504	A5
0150	1007521-501	C	PWB ASSY,DRIVER AMP	EA	1.000	ARC-C\1007521	A6
0160	1007406-501	B	AMPL ASSY,FINAL	EA	2.000	ARC-C\1007406	A7 ,A8
3100	57062		SW,TEMP SENSING,N.C.,OPEN AT 70C	EA	1.000	AIR\67L070	S1
4200	20391	-	CABLE ASSY,COAX,SEMI-RIGID,AL,SMA,SMA,5.0"	EA	1.000	ARC-A\1004578	W1
4210	1007896-502	A	CABLE ASSY,COAX,SEMI-RIGID,ALUM,SMA,SMA,7.50	EA	1.000	ARC-B\1007896	W2
4220	1007896-501	A	CABLE ASSY,COAX,SEMI-RIGID,ALUM,SMA,SMA,8.50	EA	1.000	ARC-B\1007896	W3
5000	1007701-301	E	HEATSINK	EA	1.000	ARC-D\1007701	1
5010	11016		SCREW,MACH,PAN HD,CROSS-REC,S/S,6-32 X .38	EA	11.000	\MS51957-28	2
5020	11024		SCREW,MACH,PAN HD,CROSS-REC,S/S,6-32 X 1.25	EA	28.000	\MS51957-35	3
5030	77064		COMPOUND,THERMAL JOINT,TYPE 120	EA	A/R	WAK\120-S	4
5040	12011		WASH,FLAT,S/S,#6,.312 OD X .156 ID X .035 THK	EA	8.000	\MS15795-805	5
5050	12048		WASH,LOCK,SPLIT,S/S,#6	EA	36.000	\MS35338-136	6
5060	41219		ADPTR,SMA,PLUG TO PLUG	EA	1.000	MAC\2081-0000-02	7
5070	12024		WASH,FLAT,B/ZN PLTG,.312 OD X .164 ID X .125 THK	EA	8.000	\S785-M01-F21-.164	8
5080	69100		LUG,SHAKEPROOF,BENT,41/64 L,#6 STUD,DUAL HOLE	EA	3.000	HHS\1416-6	9
5090	69238	-	BASE,MTG,CABLE TIE,ADH BACK,3/4 X 3/4	EA	A/R	TAB\TC-344A	10
5100	69161		CABLE TIES,1 3/8 MAX BUNDLE DIA,5 5/8 L	EA	A/R	PNT\PLT1.5MP	11
5110	1007898-501	-	HARNESS ASSY,PRE-AMP/LEVELER	EA	1.000		12
5120	1007897-501	-	HARNESS ASSY,1W AMP/BIAS CTRL	EA	1.000		13

BILL NO: 1007698-501 REV: D U/M: EA DRAWING NO: ARC-D\1007698
RF ASSY

SEQ	PART NUMBER	REV	D E S C R I P T I O N	U/M	QUANTITY-PER	DRAWING NUMBER	REF-DSGN
5130	69338		CONTACT,FINGER STOCK,TWIST GASKET,TIN PL	IN	A/R	I-S\OSG8-0559-17	14
5140	66043		WIRE,BUSS,TINNED,COPPER,16 AWG	IN	A/R		15
5145	69352		CONTACT,FINGER STOCK,TWIST GASKET,TIN PL	IN	A/R	I-S\OC97-0560-17	16
5150	66034		WIRE,TFE,22 AWG,STRANDED,TYPE E,WHT	IN	A/R		
5160	66025		WIRE,TFE,22 AWG,STRANDED,TYPE E,BLK	IN	A/R		
5170	66083		WIRE,TFE,22 AWG,STRANDED,TYPE E,WHT/VIO	IN	A/R		
5180	66031		WIRE,TFE,22 AWG,STRANDED,TYPE E,BLU	IN	A/R		
5190	66027		WIRE,TFE,22 AWG,STRANDED,TYPE E,RED	IN	A/R		

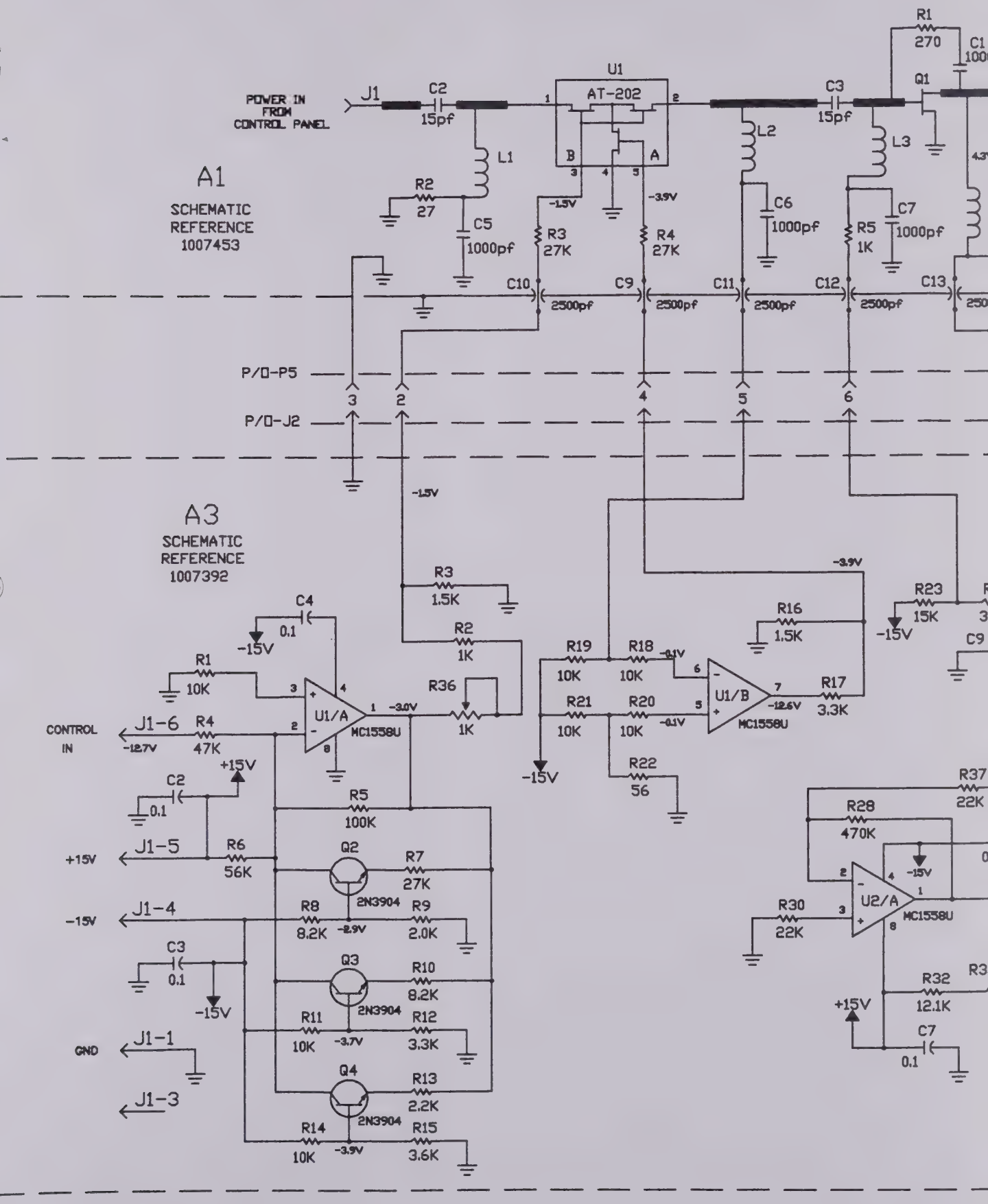
A1
SCHEMATIC
REFERENCE
1007453
POWER IN
FROM
CONTROL PANEL
J1
C2
15pf
U1
AT-202
L1
R2
27
C5
1000pf
R3
27K
R4
27K
C3
15pf
L2
C6
1000pf
L3
C7
1000pf
R5
1K
Q1
R1
270
C10
C9
C11
C12
C13
2500pf
P/O-P5
P/O-J2
A3
SCHEMATIC
REFERENCE
1007392
C4
0.1
-15V
R1
10K
U1/A
MC1558U
R36
1K
R2
1K
R3
1.5K
CONTROL
IN
J1-6
R4
47K
C2
0.1
+15V
J1-5
R6
56K
R5
100K
Q2
2N3904
R7
27K
R8
8.2K
R9
2.0K
J1-4
C3
0.1
Q3
R10
8.2K
R11
10K
R12
3.3K
GND
J1-1
J1-3
Q4
R13
2.2K
R14
10K
R15
3.6K
R19
10K
R18
10K
R21
10K
R20
10K
U1/B
MC1558U
R16
1.5K
R17
3.3K
R22
56
R23
15K
R28
470K
R37
22K
U2/A
MC1558U
R30
22K
R32
12.1K
C7
0.1

ECN	DATE	REV
–	7JUL95	1
–	4AUG95	2
REL	30OCT95	–
R114	3NOV95	A
R145	29NOV95	B

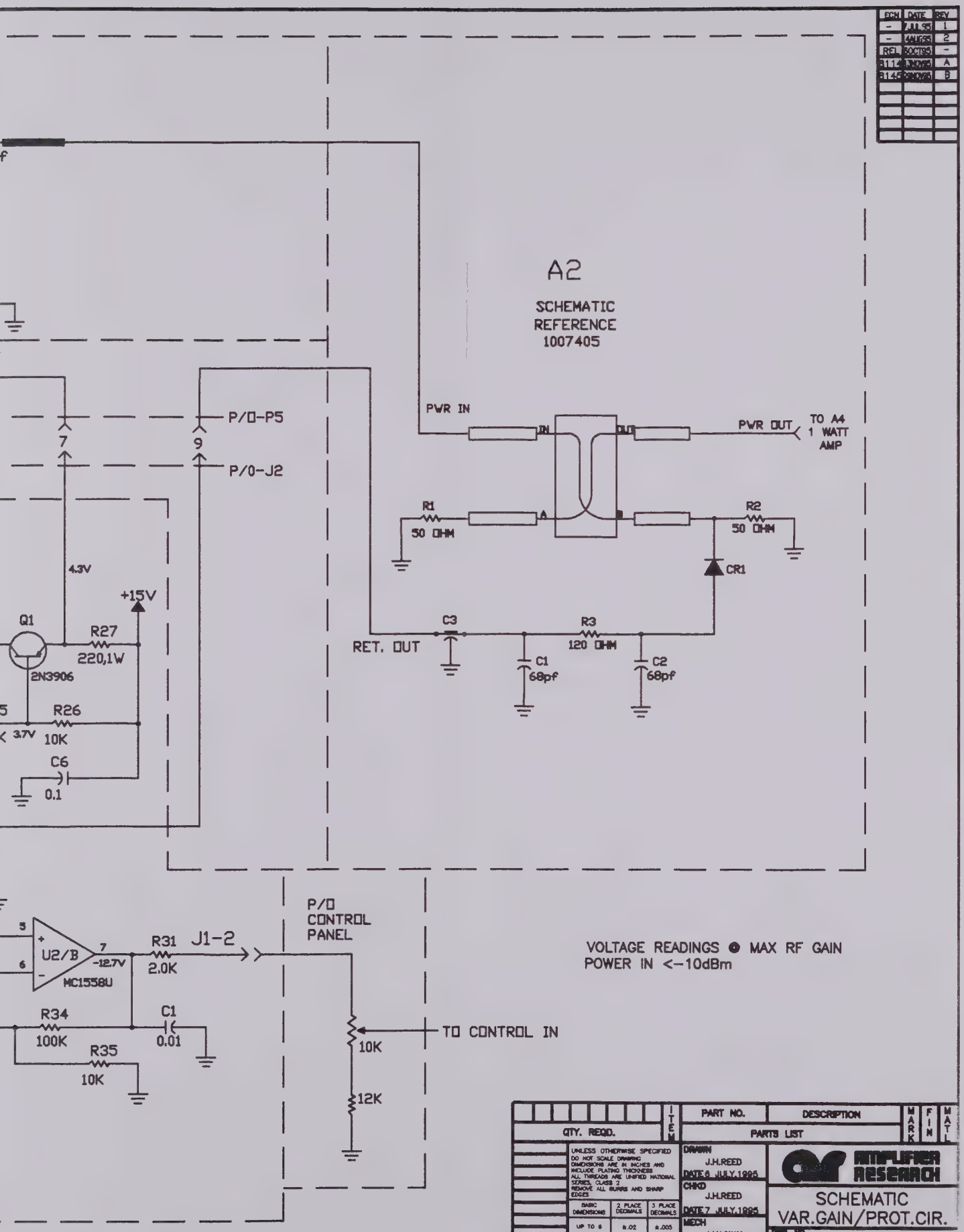

QTY. REQD.	ITEM	PART NO.	DESCRIPTION	MARK	FIN	MATL
		PARTS LIST				

UNLESS OTHERWISE SPECIFIED DO NOT SCALE DRAWING DIMENSIONS ARE IN INCHES AND INCLUDE PLATING THICKNESS ALL THREADS ARE UNIFIED NATIONAL SERIES, CLASS 2 REMOVE ALL BURRS AND SHARP EDGES

BASIC DIMENSIONS	2 PLACE DECIMALS	3 PLACE DECIMALS
UP TO 6	±.02	±.005
ABOVE 6 TO 24	±.03	±.010
ABOVE 24	±.06	±.015

ANGULAR DIMENSIONS 1/2°

1S104
USED ON MODEL

DRAWN J.H.REED DATE 6 JULY 1995
CHKD J.H.REED DATE 7 JULY 1995
MECH J.MAGINN DATE 6 OCT 95
ELEC F.SCHIRK DATE 6 OCT 95

AMPLIFIER RESEARCH

SCHEMATIC
VAR.GAIN/PROT.CIR.

DWG. NO. 1007691

SCALE NONE SHEET 1 OF 1 REV. B

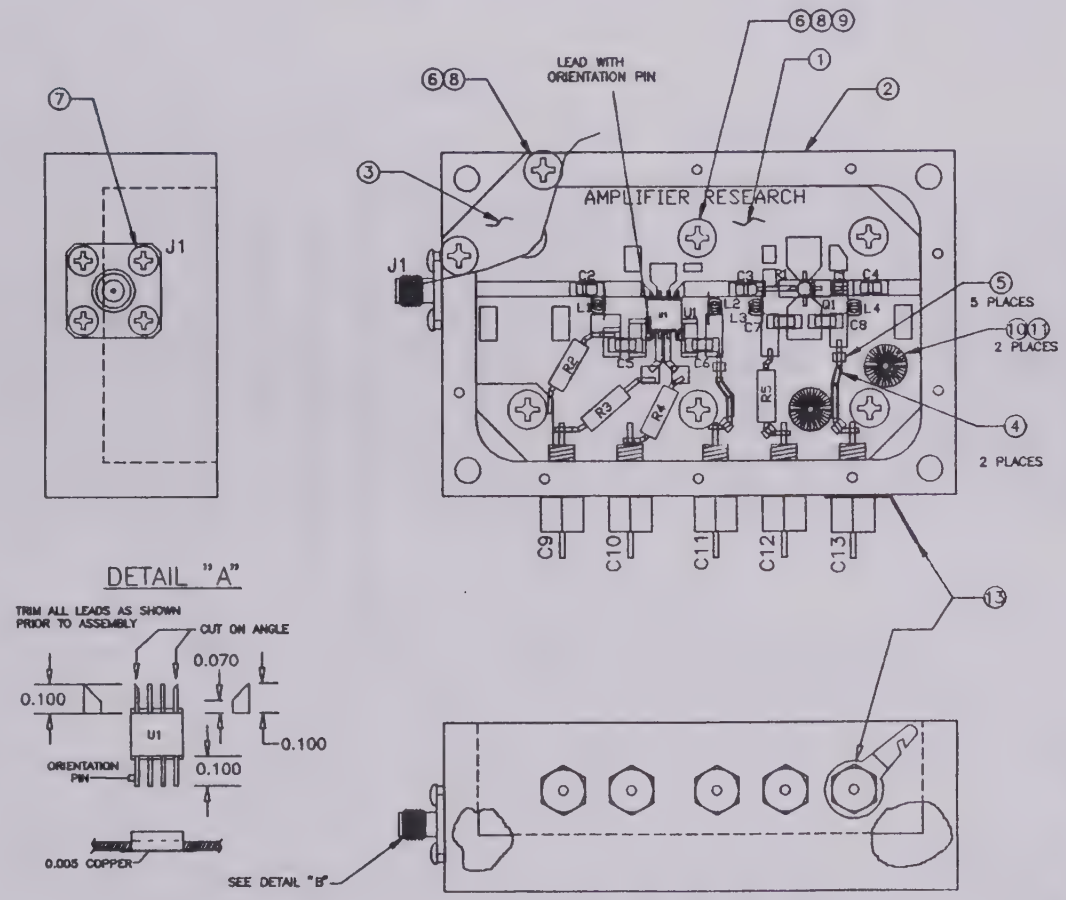

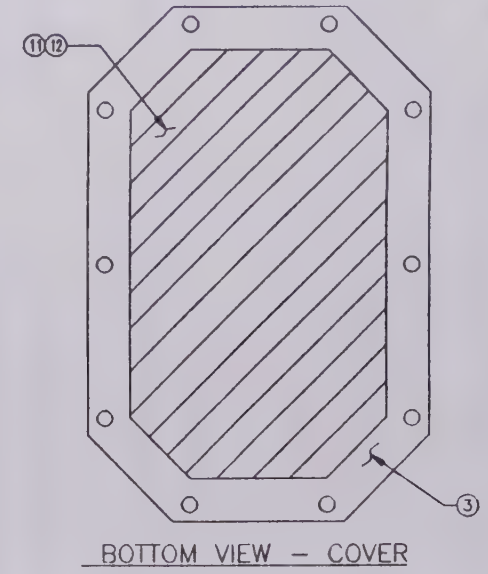

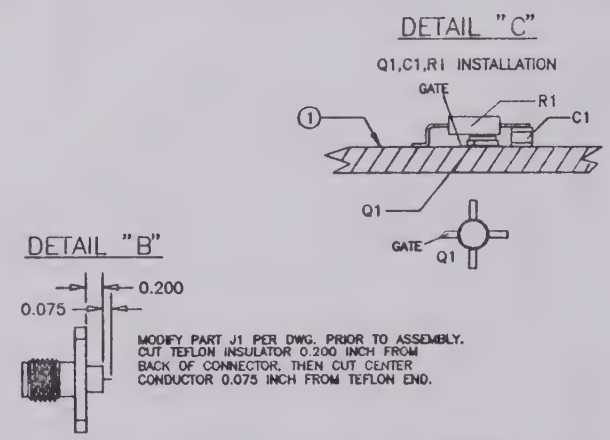

MODIFY PART J1 PER DWG. PRIOR TO ASSEMBLY. CUT TEFLON INSULATOR 0.200 INCH FROM BACK OF CONNECTOR. THEN CUT CENTER CONDUCTOR 0.075 INCH FROM TEFLON END.

ASSEMBLY PROCEDURE
VARIABLE GAIN AMP

1) INSTALL U1 TO P.C. BOARD. SOLDER 5 MIL. THICK COPPER FROM BOTTOM OF U1 TO GROUND PLANE. U1 INSTALLATION MUST BE DONE AT A STATIC APPROVED WORK STATION, SEE DETAIL "A".
2) INSTALL P.C. BOARD INTO HOUSING.
3) INSTALL J1, PREPARE J1 ACCORDING TO DIMENSIONS SHOWN IN DETAIL "B".
4) INSTALL FEEDTHRU C9 TO C13 INTO HOUSING.
5) INSTALL ALL OF THE CERAMIC CHIP CAPS EXCEPT C1.
6) INSTALL L1 THRU L4.
7) INSTALL R2 TO P.C. BOARD, KEEP LENGTHS AS SHORT AS POSSIBLE.
8) INSTALL R3 THRU R5 AND ITEM #4 (22 AWG SOLID WHITE WIRE) BETWEEN FEEDTHRU AND P.C. BOARD. CUT LEADS AS SHORT AS POSSIBLE.

NOTE: FET INSTALLATION MUST BE DONE AT A STATIC APPROVED WORK STATION. PERSONS MUST BE FAMILIAR WITH THE PROCEDURES. THE FET CAN BE DESTROYED EASILY BOTH ELECTRONICALLY AND MECHANICALLY.

FET INSTALLATION:
1) CUT GATE LEAD TO APPROXIMATELY .075" LONG, THE LEAD MUST BE CUT AT AN ANGLE TO MAINTAIN LEAD IDENTIFICATION.
2) CUT THE SOURCE LEADS AND THE DRAIN LEAD AT APPROXIMATELY .075" LONG.
3) WITH A GROUNDED SOLDERING IRON, SOLDER Q1 INTO THE CIRCUIT.
4) INSTALL CHIP CAP C1 AS SHOWN IN DETAIL "C".
5) INSTALL RESISTOR R1 AS SHOWN IN DETAIL "C".

QTY. REQD.	ITEM	PART NO.	DESCRIPTION	MARK	FIN	MATL
		PARTS LIST				

UNLESS OTHERWISE SPECIFIED DO NOT SCALE DRAWING. DIMENSIONS ARE IN INCHES AND INCLUDE PLATING THICKNESS. ALL THREADS ARE UNIFIED NATIONAL SERIES, CLASS 2. REMOVE ALL BURRS AND SHARP EDGES

	BASIC DIMENSIONS	2 PLACE DECIMALS	3 PLACE DECIMALS
10S1G4	UP TO 6	± .02	± .005
5S1G4	ABOVE 6 TO 24	± .03	± .010
1S1G4	ABOVE 24	± .06	± .015
USED ON MODEL	ANGULAR DIMENSIONS 1/2°		

DRAWN J.H.REED DATE 24 MAY 1995
CHKD J.H.REED DATE 1 JUNE 1995
MECH J.MAGINN DATE 6 OCT 95
ELEC F.SCHIRK DATE 6 OCT 95

AMPLIFIER RESEARCH

ASSEMBLY
VARIABLE GAIN AMP

DWG. NO. 1007451

SCALE NONE | SHEET 1 OF 1 | REV. B

AMPLIFIER RESEARCH

14:18:15 17 SEP 1996 * * * SINGLE LEVEL BILL OF MATERIAL LISTING * * * REPORT: E0056 PAGE: 1

BILL NO: 1007451-501 REV: B U/M: EA DRAWING NO: ARC-B\1007451

PWB ASSY,VAR GAIN AMP

SEQ	PART NUMBER	REV	D E S C R I P T I O N	U/M	QUANTITY-PER	DRAWING NUMBER	REF-DSGN
0010	1007453	-	SCHEM,LINEARIZER CTRL	EA	REF	ARC-C\1007453	
0400	27039		CAPR,CHIP,CER,1000pF,10%,50V	EA	6.000	ATC\700B102MCA50X	C1 ,C4 C5 ,C6 C7 ,C8
0410	27031		CAPR,CHIP,15pF,20%,500V	EA	2.000	DIL\C17AH150MATXL	C2 ,C3
0420	27099		CAPR,FEED-THRU,FILT,2500PF,500V	EA	5.000	MET\51-719-011	C9 ,C10 C11 ,C12 C13
1500	41185	-	CONN,SMA,ST PNL JACK,4 HOLE FLANGE MOUNT	EA	1.000	MOS\2052-1901-02	J1
1800	1007507-101	-	INDUCTOR,AIR WOUND,.050ID,34GA,4T	EA	2.000	ARC-B\1007507	L1 ,L4
1810	1007507-103	-	INDUCTOR,AIR WOUND,.050ID,34GA,7T	EA	2.000	ARC-A\1007507	L2 ,L3
2500	1000034-176		XSTR,RF,LOW NOISE,GaAsFET	EA	1.000	ARC-A\1000034	Q1
2700	55511-2700J		RES,FXD,CARBON COMP,270,5%,1/8W	EA	1.000	A-B\BB2715	R1
2710	55512-27R0J		RES,FXD,CARBON COMP,27,5%,1/4W	EA	1.000	A-B\CB2705	R2
2720	55612-2702J		RES,FXD,METAL FILM,27K,5%,1/4-1/2W	EA	2.000	TRW\GP55-2702+/-5%	R3 ,R4
2730	55612-1001J		RES,FXD,METAL FILM,1K,5%,1/4-1/2W	EA	1.000	TRW\GP55-1001+/-5%	R5
3700	25035		ATTEN,V VAR,DC-5 GHZ	EA	1.000	ANZ\AT-202	U1
5000	1007452-101	A	PWB,VAR GAIN AMP	EA	1.000	ARC-C\1007452	1
5010	1007427-101	A	HSG,VAR GAIN AMP	EA	1.000	ARC-C\1007427	2
5020	1007428-101	-	COVER,VAR GAIN AMP	EA	1.000	ARC-B\1007428	3
5030	66035		WIRE,TFE,22 AWG,SOLID WHT	IN	A/R	WEI\2822	4
5040	1000643-401	C	CORE,FERRITE,BEAD	EA	5.000	ARC\1000643	5
5050	11010		SCREW,MACH,PAN HD,CROSS-REC,S/S,4-40 X .25	EA	16.000	\MS51957-13	6
5060	11008		SCREW,MACH FIL HD,SLOTTED,S/S,3-56 X .25	EA	4.000	PCI\AN501-D3-4	7
5070	12047		WASH,LOCK,SPLIT,S/S,#4	EA	16.000	\MS35338-135	8
5080	12010		WASH,FLAT,S/S,#4,.250 OD X .125 ID X .022 THK	EA	6.000	\MS15795-803	9

BILL NO: 1007451-501 REV: B U/M: EA DRAWING NO: ARC-B\1007451
PWB ASSY,VAR GAIN AMP

SEQ	PART NUMBER	REV	D E S C R I P T I O N	U/M	QUANTITY-PER	DRAWING NUMBER	REF-DSGN
5090	1000643-402	C	CORE,FERRITE,BEAD,CMD5005	EA	2.000	ARC\1000643	10
5100	77065		SEALANT,RTV,FLUOROSILE	EA	A/R	G-E\730 RTV	11
5110	69332		FOAM,CONDUCTIVE	IN	A/R	MMM\2802	12
5120	69101		LUG,SOLDER,BENT TONGUE,3/4 L,3/8 OD,1/4 STUD	EA	1.000	HHS\1496	13

ECN	DATE	REV
-	11 MAR 96	1
-	11 APR 96	2
REL	25 SEP 96	-
01A	19 MAR 97	A

DETAIL "A"

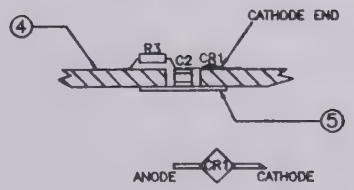

DETAIL "B"

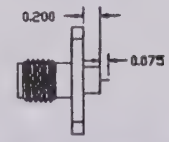

MODIFY PART J1 PER ABOVE DWG.
PRIOR TO ASSEMBLY.
CUT TEFLON INSULATOR 0.2 INCH FROM BACK OF CONNECTOR, THEN CUT CENTER CONDUCTOR 0.075 INCH FROM TEFLON END.

DETAIL "C"

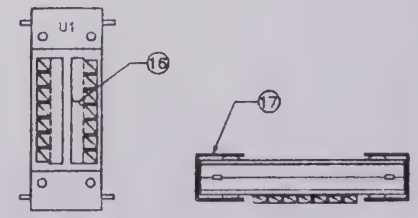

BOTTOM VIEW OF U1

SIDE VIEW OF U1

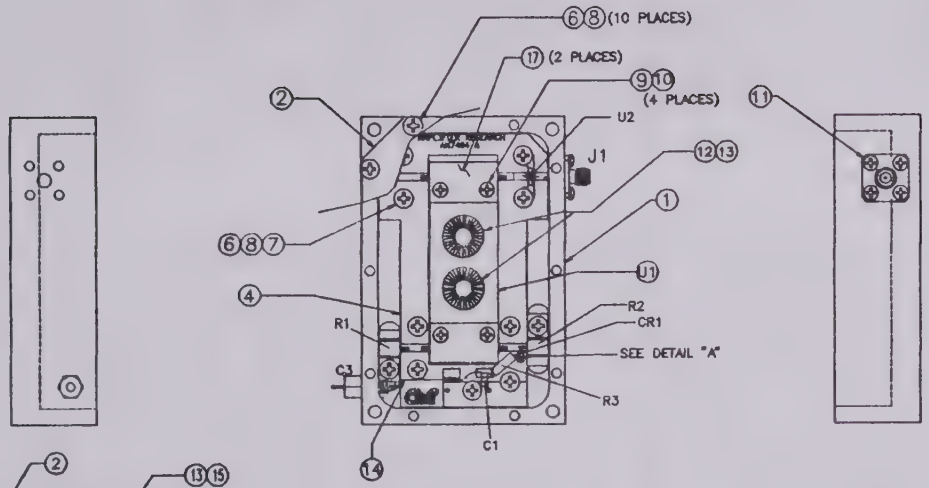

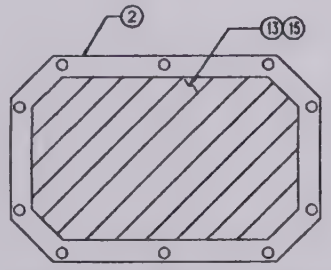

BOTTOM VIEW – COVER

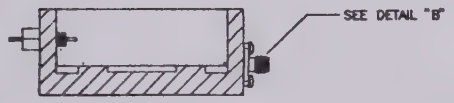

ASSEMBLY PROCEDURE
SPLITTER/DETECTOR

1) SOLDER 5 MIL. THICK COPPER TO BOTTOM OF P.C. BOARD 1007404 OVER CLEARANCE HOLE FOR C2. SEE DETAIL "A".
2) INSTALL C2 INTO CLEARANCE HOLE ON 1007404 P.C. BOARD.
3) INSTALL P.C. BOARD 1007404 INTO HOUSING.
4) INSTALL 50 TERMINATION RESISTORS R1 AND R2.
5) INSTALL CR1 INTO CIRCUIT.
   NOTE: INSTALLATION OF CR1 MUST BE DONE AT A STATIC APPROVED WORK STATION.
   a) CUT THE CATHODE LEAD TO APPROXIMATELY .075" LONG, THE LEAD MUST BE CUT AT AN ANGLE TO MAINTAIN LEAD IDENTIFICATION.
   b) CUT THE ANODE LEAD TO APPROXIMATELY .075" LONG.
   c) WITH A GROUNDED SOLDERING IRON, SOLDER CR1 INTO THE CIRCUIT.
6) INSTALL REMAINING COMPONENTS C1, AND R3 INTO CIRCUIT. KEEP LENGTH ON R3 AS SHORT AS POSSIBLE.
7) INSTALL CONNECTOR J1 INTO HOUSING.
   NOTE: CUT J1 TO DIMENSIONS SHOWN ON THE ASSEMBLY PRINT.
8) PLACE RF SHIELDS,(ITEM 17), OVER BOTH ENDS OF U1 AND ATTACH FINGER CONTACT TO THE BOTTOM OF U1. SEE DETAIL "C" THEN INSTALL U1 INTO THE CIRCUIT.

QTY. REQD.	ITEM	PART NO.	DESCRIPTION	MARK	FIN	MATL
		PARTS LIST				

UNLESS OTHERWISE SPECIFIED
DO NOT SCALE DRAWING
DIMENSIONS ARE IN INCHES AND INCLUDE PLATING THICKNESS
ALL THREADS ARE UNIFIED NATIONAL SCREW, CLASS 2
REMOVE ALL BURRS AND SHARP EDGES

BASIC DIMENSIONS	2 PLACE DECIMALS	3 PLACE DECIMALS
UP TO 6	± .02	± .005
ABOVE 6 TO 24	± .03	± .010
ABOVE 24	± .06	± .015

ANGULAR DIMENSIONS 1/2°

USED ON MODEL: 10S1G4, 5S1G4, 1S1G4

DRAWN J.H.REED DATE 24 MAY 1995
CHKD J.H.REED DATE 21 AUG 1995
MECH J.MAGINN DATE 20 NOV 96
ELEC F.SCHIRK DATE 20 NOV 96

AMPLIFIER RESEARCH

ASSEMBLY SPLITTER/DETECTOR

DWG. NO. 1007401

SCALE NONE | SHEET 1 OF 1 | REV. A

AMPLIFIER RESEARCH

14:18:16 17 SEP 1996 * * * SINGLE LEVEL BILL OF MATERIAL LISTING * * * REPORT: E0056 PAGE: 1

BILL NO: 1007401-501 REV: C U/M: EA DRAWING NO: ARC-C\1007401
PWB ASSY,SPLITTER/DETR

SEQ	PART NUMBER	REV	DESCRIPTION	U/M	QUANTITY-PER	DRAWING NUMBER	REF-DSGN
0010	1007405	-	SCHEM,SPLITTER/DETR	EA	REF	ARC-B\1007405	
0400	27261		CAPR,CHIP,68pF,10%,150V	EA	2.000	ATC\100A680KCA150X	C1 ,C2
0410	27098		CAPR,FEED-THRU,FILT,470PF,10%	EA	1.000	MET\FB2B-471GMV	C3
0700	30039		DIODE,SCHOTTKY,DET,MICRO-WAVE	EA	1.000	H-P\5082-2794	CR1
1500	41185	-	CONN,SMA,ST PNL JACK,4 HOLE FLANGE MOUNT	EA	1.000	MOS\2052-1901-02	J1
2700	56072		RES,FXD,PRECISION,FLANGE,MOUNT,50	EA	2.000	RFP\RFP-20-50TP	R1 ,R2
2710	55511-1500J		RES,FXD,CARBON COMP,150,5%,1/8W	EA	1.000	A-B\BB1515	R3
3700	25046		COUPLER,90 DEG,HYBRID	EA	1.000	RFP\102-422-90-200	U1
3710	25055	-	ATTEN,FXD,4dB,1W,70 MIL PKG	EA	1.000	MIN\PAT-4	U2
5000	1007435-101	B	HSG,SPLITTER/DETR	EA	1.000	ARC-D\1007435	1
5010	1007434-101	-	COVER,SPLITTER/DETR	EA	1.000	ARC-B\1007434	2
5030	1007404-101	A	PWB,SPLITTER/DETR BD	EA	1.000	ARC-B\1007404	4
5040	77144	-	SHIM,BRASS,6.00X.003 THK (ROLL 100")	EA	A/R	MSS\00051037	5
5050	11010		SCREW,MACH,PAN HD,CROSS-REC,S/S,4-40 X .25	EA	23.000	\MS51957-13	6
5060	12010		WASH,FLAT,S/S,#4,.250 OD X .125 ID X .022 THK	EA	9.000	\MS15795-803	7
5070	12047		WASH,LOCK,SPLIT,S/S,#4	EA	23.000	\MS35338-135	8
5080	11007		SCREW,MACH,PAN HD,CROSS-REC,S/S,2-56 X .38	EA	4.000	\MS51957-5	9
5090	12005		WASH,LOCK,SPLIT,S/S,#2	EA	4.000	\MS35338-134	10
5100	11008		SCREW,MACH FIL HD,SLOTTED,S/S,3-56 X .25	EA	4.000	PCI\AN501-D3-4	11
5110	1000643-633	H	CORE,FERRITE,TOROID	EA	2.000	ARC\1000643	12
5120	77065		SEALANT,RTV,FLUOROSILE	EA	A/R	G-E\730 RTV	13
5130	66035		WIRE,TFE,22 AWG,SOLID WHT	IN	A/R	WEI\2822	14
5140	69332		FOAM,CONDUCTIVE	IN	A/R	MMM\2802	15
5150	69338		CONTACT,FINGER STOCK,TWIST GASKET,TIN PL	IN	A/R	I-S\OSG8-0559-17	16

BILL NO: 1007401-501 REV: C U/M: EA DRAWING NO: ARC-C\1007401
PWB ASSY,SPLITTER/DETR

SEQ	PART NUMBER	REV	D E S C R I P T I O N	U/M	QUANTITY-PER	DRAWING NUMBER	REF-DSGN
5160	1007919-101	-	SHIELD,RF	EA	2.000	ARC-B\1007919	17

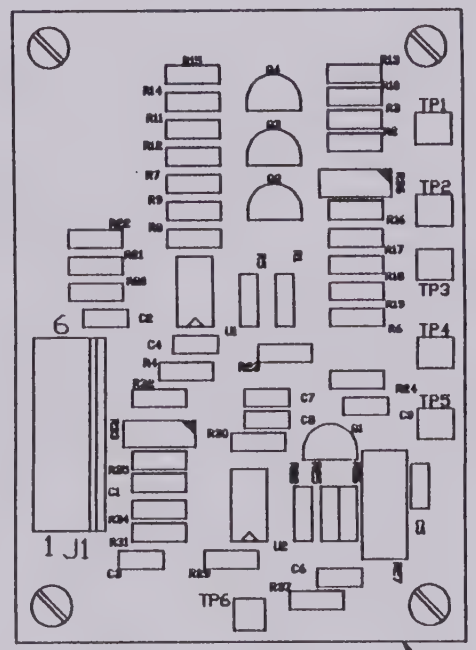
TP1
TP2
TP3
TP4
TP5
TP6
6
1 J1

ECN	DATE	REV
REL	6OCT95	-

1

QTY. REQD.	ITEM	PART NO.	DESCRIPTION	MARK	FIN	MATL
		PARTS LIST				

UNLESS OTHERWISE SPECIFIED
DO NOT SCALE DRAWING
DIMENSIONS ARE IN INCHES AND INCLUDE PLATING THICKNESS
ALL THREADS ARE UNIFIED NATIONAL SERIES, CLASS 2
REMOVE ALL BURRS AND SHARP EDGES

BASIC DIMENSIONS	2 PLACE DECIMALS	3 PLACE DECIMALS
UP TO 6	±.02	±.005
ABOVE 6 TO 24	±.03	±.010
ABOVE 24	±.06	±.015

ANGULAR DIMENSIONS 1/2°

1S1G4
USED ON MODEL

DRAWN J.H.REED
DATE 31 MAR 1995
CHKD J.H.REED
DATE 1 JUNE,1995
MECH
DATE
ELEC
DATE

AMPLIFIER RESEARCH

PWB ASY
LINEARIZER/CONTROL

DWG. NO. 1007454

SCALE NONE | SHEET 1 OF 1 | REV. —

BILL NO: 1007454-501 REV: D U/M: EA DRAWING NO: ARC-B\1007454
PWB ASSY,LINEARIZER/CTRL BD

SEQ	PART NUMBER	REV	DESCRIPTION	U/M	QUANTITY-PER	DRAWING NUMBER	REF-DSGN
0010	1007392	A	SCHEM DIAG,LINEARIZER CONT.	EA	REF	ARC-C\1007392	
0400	27189		CAPR,CER,0.01uF,20%,500V	EA	1.000	SPR\5GAS-S10	C1
0410	27236		CAPR,FXD,DIP SPACED CER,.1UF,50VDC	EA	7.000	AVX\MD015C104MAA	C2 ,C3 C4 ,C6 C7 ,C8 C9
1500	41083		CONN,LOCKING HEADER,STR,6 PIN	EA	1.000	PNT\MLSS156-6-C	J1
1510	41084		CONN,LOCKING HEADER,STR,10 PIN,SQR POSTS	EA	1.000	PNT\MLSS156-10-L	J2
2500	2N3906		XSTR,SWNG,PNP,40V,0.2A,1W	EA	1.000	ARE\2N3906	Q1
2510	2N3904		XSTR,SWNG,NPN,40V,0.2A,1W	EA	3.000		Q2 ,Q3 Q4
2700	55612-1002J		RES,FXD,METAL FILM,10K,5%,1/4-1/2W	EA	10.000	TRW\GP55-1002+/-5%	R1 ,R11 R14 ,R18 R19 ,R20 R21 ,R26 R29 ,R35
2705	55612-1001J		RES,FXD,METAL FILM,1K,5%,1/4-1/2W	EA	1.000	TRW\GP55-1001+/-5%	R2
2710	55612-1501J		RES,FXD,METAL FILM,1.5K,5%,1/4-1/2W	EA	2.000	TRW\GP55-1501+/-5%	R3 ,R16
2720	55612-4702J		RES,FXD,METAL FILM,47K,5%,1/4-1/2W	EA	1.000	TRW\GP55-4702+/-5%	R4
2730	55612-1003J		RES,FXD,METAL FILM,100K,5%,1/4-1/2W	EA	2.000	TRW\GP55-1003+/-5%	R5 ,R34
2740	55612-5602J		RES,FXD,METAL FILM,56K,5%,1/4-/12W	EA	1.000	TRW\GP55-5602+/-5%	R6
2750	55612-2702J		RES,FXD,METAL FILM,27K,5%,1/4-1/2W	EA	1.000	TRW\GP55-2702+/-5%	R7
2760	55612-8201J		RES,FXD,METAL FILM,8.2K,5%,1/4-1/2W	EA	2.000	TRW\GP55-8201+/-5%	R8 ,R10
2770	55612-2001J		RES,FXD,METAL FILM,2.0K,5%,1/4-1/2W	EA	2.000	TRW\GP55-2001+/-5%	R9 ,R31
2780	55612-3301J		RES,FXD,METAL FILM,3.3K,5%,1/4-1/2W	EA	3.000	TRW\GP55-3301+/-5%	R12 ,R17 R25
2783	55612-2201J		RES,FXD,METAL FILM,2.2K,5%,1/4-1/2W	EA	1.000	TRW\GP55-2201+/-5%	R13
2787	55612-3601F		RES,FXD,PRECISION,3.6K,1%,1/4-1/2W,CHAR.D	EA	1.000	MEP\RN55D3601F	R15
2790	55612-3901J		RES,FXD,METAL FILM,3.9K,5%,1/4-1/2W	EA	1.000	TRW\GP55-3901+/-5%	R24

BILL NO: 1007454-501 REV: D U/M: EA DRAWING NO: ARC-B\1007454
PWB ASSY,LINEARIZER/CTRL BD

SEQ	PART NUMBER	REV	D E S C R I P T I O N	U/M	QUANTITY-PER	DRAWING NUMBER	REF-DSGN
2800	55612-56R0J		RES,FXD,METAL FILM,56,5%,1/4-1/2W	EA	1.000	TRW\GP55-56R0+/-5%	R22
2810	55612-1502J		RES,FXD,METAL FILM,15K,5%,1/4-1/2W	EA	1.000	TRW\GP55-1502+/-5%	R23
2820	55514-2200J		RES,FXD,CARBON COMP,220,5%,1W	EA	1.000	A-B\GB2215	R27
2830	55612-4703J		RES,FXD,METAL FILM,470K,5%,1/4-1/2W	EA	1.000	TRW\GP55-4703+/-5%	R28
2840	55612-2202J		RES,FXD,METAL FILM,22K,5%,1/4-1/2W	EA	2.000	TRW\GP55-2202+/-5%	R30 ,R37
2850	55612-1212F		RES,FXD,METAL FILM,12.1K,5%,1/4-1/2W	EA	1.000		R32
2860	55919		RES,VAR,CERMET,MULTITURN,TOP ADJ,10K,10%,1/2W	EA	1.000	BOR\3299Y-1-103	R33
2870	55917		RES,VAR,CERMET,MULTITURN,TOP ADJ,1K,10%,1W	EA	1.000	MEP\RJ24FW102	R36
3700	60039		INTEGRATED CKT,DUAL OP AMP	EA	2.000	MOT\MC1558U	U1 ,U2
4500	73010		SOCKET,I.C.,8 PIN,DIP	EA	2.000	TII\C93-08-02	XU1 ,XU2
5000	1007455-101	A	PWB,LINEARIZER/CTRL BD	EA	1.000	ARC-B\1007455	1

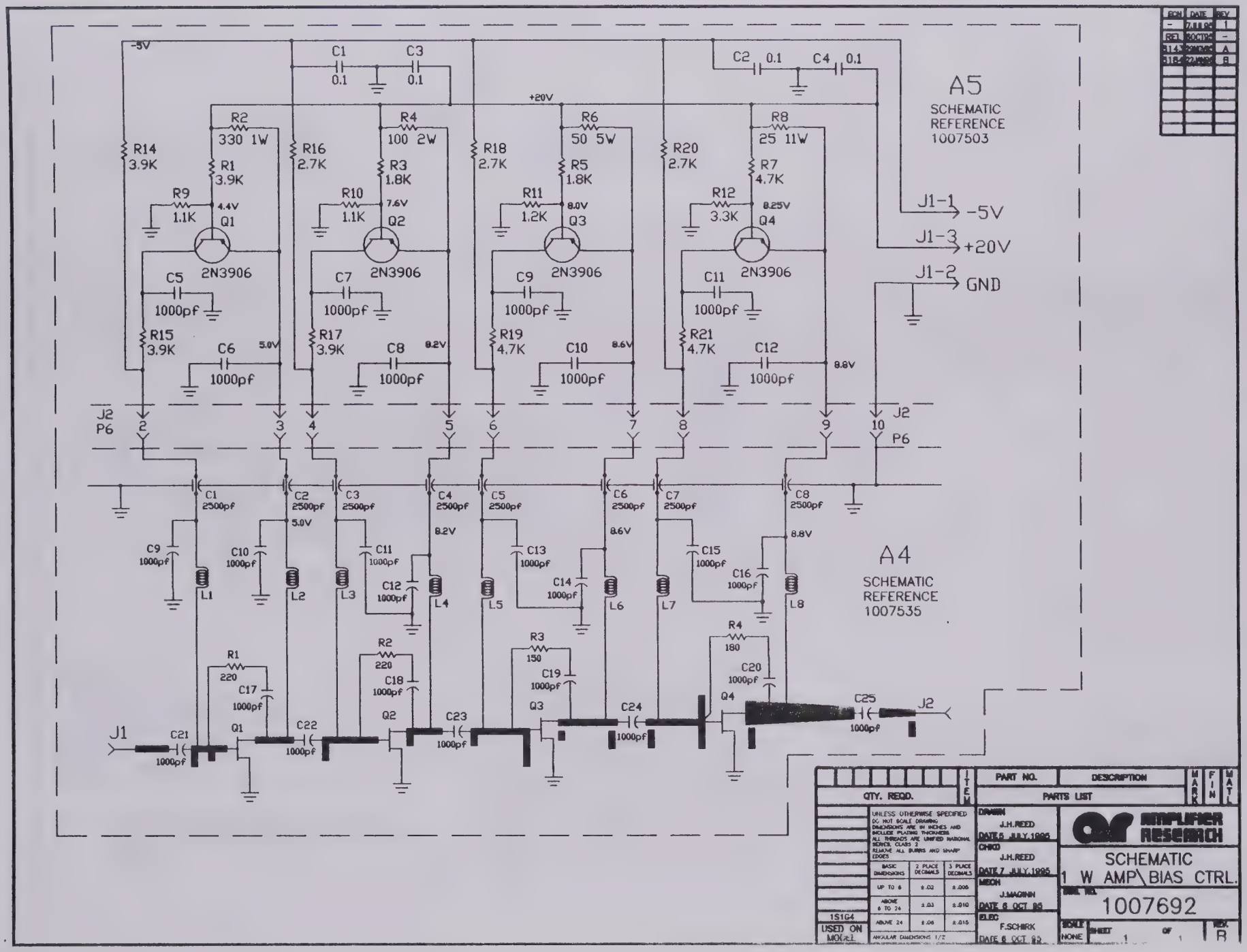
A5
SCHEMATIC
REFERENCE
1007503
A4
SCHEMATIC
REFERENCE
1007535
J1-1 -5V
J1-3 +20V
J1-2 GND
J1
J2
J2 P6
-5V
+20V
C1 0.1
C3 0.1
C2 0.1
C4 0.1
R2 330 1W
R4 100 2W
R6 50 5W
R8 25 11W
R14 3.9K
R16 2.7K
R18 2.7K
R20 2.7K
R1 3.9K
R3 1.8K
R5 1.8K
R7 4.7K
R9 1.1K
R10 1.1K
R11 1.2K
R12 3.3K
4.4V
7.6V
8.0V
8.25V
Q1
Q2
Q3
Q4
2N3906
C5 1000pf
C7 1000pf
C9 1000pf
C11 1000pf
R15 3.9K
R17 3.9K
R19 4.7K
R21 4.7K
C6 1000pf
C8 1000pf
C10 1000pf
C12 1000pf
5.0V
8.2V
8.6V
8.8V
C1 2500pf
C2 2500pf
C3 2500pf
C4 2500pf
C5 2500pf
C6 2500pf
C7 2500pf
C8 2500pf
C9 1000pf
C10 1000pf
C11 1000pf
C12 1000pf
C13 1000pf
C14 1000pf
C15 1000pf
C16 1000pf
L1
L2
L3
L4
L5
L6
L7
L8
R1 220
C17 1000pf
R2 220
C18 1000pf
R3 150
C19 1000pf
R4 180
C20 1000pf
C21 1000pf
C22 1000pf
C23 1000pf
C24 1000pf
C25 1000pf
QTY. REQD.
ITEM
PART NO.
DESCRIPTION
PARTS LIST
MARK
FIN
MATL
UNLESS OTHERWISE SPECIFIED
DO NOT SCALE DRAWING
DIMENSIONS ARE IN INCHES AND
INCLUDE PLATING THICKNESS
ALL THREADS ARE UNIFIED NATIONAL
SERIES, CLASS 2
REMOVE ALL BURRS AND SHARP
EDGES
BASIC DIMENSIONS
2 PLACE DECIMALS
3 PLACE DECIMALS
UP TO 6
±.02
±.005
ABOVE 6 TO 24
±.03
±.010
ABOVE 24
±.06
±.015
ANGULAR DIMENSIONS 1/2
1S1G4
USED ON MODEL
DRAWN J.H.REED DATE 5 JULY 1995
CHKD J.H.REED DATE 7 JULY 1995
MECH J.MAGINN DATE 6 OCT 95
ELEC F.SCHIRK DATE 6 OCT 95
AMPLIFIER RESEARCH
SCHEMATIC
1 W AMP\BIAS CTRL.
DWG. NO. 1007692
SCALE NONE
SHEET 1 OF 1
REV. B

ECN	DATE	REV
–	14 APR 95	1
–	15 NOV 95	2
REL	7/13/95	–
8184	7/14/95	A

DETAIL "A"

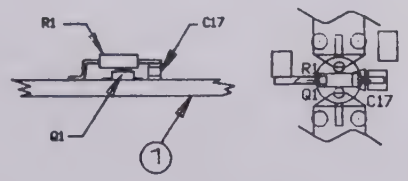

DETAIL "B"

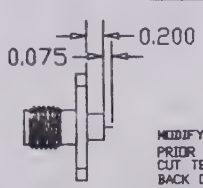

MODIFY PARTS J1 & J2 PER ABOVE DWG. PRIOR TO ASSEMBLY.
CUT TEFLON INSULATOR 0.2 INCH FROM BACK OF CONNECTOR, THEN CUT CENTER CONDUCTOR 0.075 INCH FROM TEFLON END.

DETAIL "C"

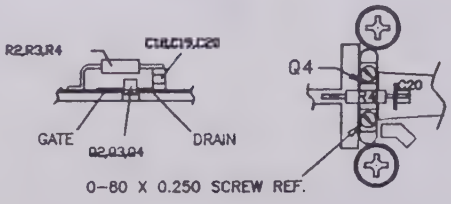

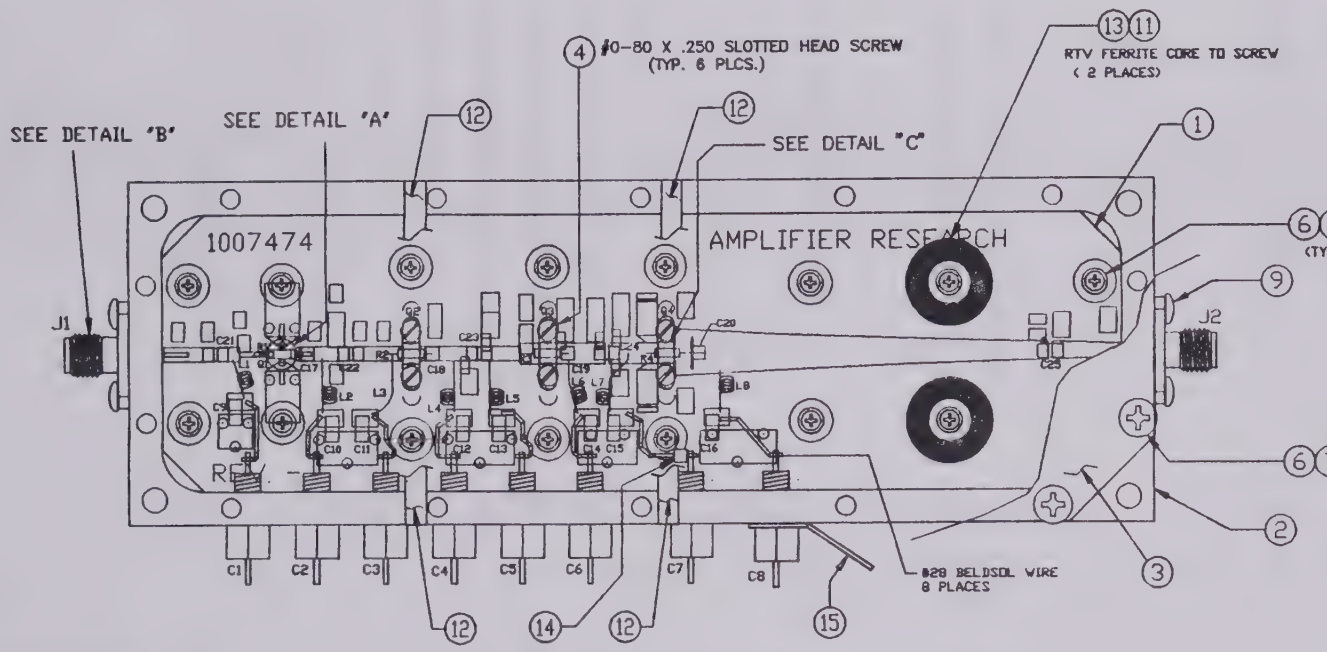

BOTTOM VIEW - COVER

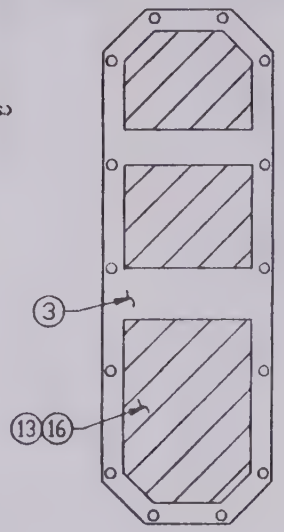

ASSEMBLY PROCEDURE
1 WATT AMP

1) INSTALL P.C. BOARD INTO HOUSING - CENTER MOUNTING SCREW HOLES IN SLOTS FOR Q2, Q3 AND Q4.
2) INSTALL CONNECTOR J1 AND J2 INTO HOUSING.
   NOTE: SEE FIGURE 2.
3) INSTALL FEEDTHRU C1 THRU C8 INTO HOUSING.
4) INSTALL ALL OF THE CERAMIC CHIP CAPS EXCEPT C17, C18, C19 AND C20.
5) INSTALL L1 THRU L8.
6) INSTALL #28 BELDSOL JUMPER WIRES BETWEEN FEEDTHRU AND P.C. BOARD.

NOTE: THE FOLLOWING FET INSTALLATION MUST BE DONE AT A STATIC APPROVED WORK STATION. PERSONS HANDLING AND INSTALLING THE FET'S MUST BE FAMILIAR WITH THE PROCEDURE. THE FET CAN BE DESTROYED BOTH ELECTRICALLY AND MECHANICALLY.

7) FET INSTALLATION (GATE LEADS OF Q1-Q4 MUST FACE TOWARD J1).
   NOTE: STEPS 1 THRU 6 ABOVE MUST BE COMPLETED BEFORE INSTALLING FETS.
   Q1 (a) CUT THE GATE LEAD TO APPROXIMATELY .075" LONG - THE GATE LEAD MUST BE CUT AT AN ANGLE TO MAINTAIN LEAD IDENTIFICATION.
   (b) CUT THE SOURCE LEADS AND THE DRAIN LEAD TO APPROXIMATELY .075" LONG.
   (c) WITH A GROUNDED SOLDERING IRON, Solder Q1 INTO THE CIRCUIT.
   Q2, Q3 and Q4
   NOTE: THESE FET'S ARE FRAGILE AND ARE EASILY BROKEN WHEN CUTTING THE LEADS - DO NOT PUT EXCESSIVE STRAIN ON THE LEAD TO BODY CONNECTION.
   (a) CUT THE GATE LEAD TO APPROXIMATELY 0.075" LONG, CUT THE GATE LEAD AT AN ANGLE SO AS NOT TO LOSE IDENTIFICATION.
   (b) CUT THE DRAIN LEAD AT A 90 DEGREE ANGLE TO APPROXIMATELY 0.075" LONG.
   (c) INSTALL THE FET INTO THE UNIT.
8) INSTALL FEEDBACK CAPACITORS C17, C18, C19, C20 AS PER FIGURE 1.
9) INSTALL FEEDBACK RESISTORS R1, R2, R3 AND R4.

QTY. REQD.	ITEM	PART NO.	DESCRIPTION	MARK	FIN	MATL
		PARTS LIST				

UNLESS OTHERWISE SPECIFIED DO NOT SCALE DRAWING. DIMENSIONS ARE IN INCHES AND INCLUDE PLATING THICKNESS. ALL THREADS ARE UNIFIED NATIONAL, ANSI, CLASS 2. REMOVE ALL BURRS AND SHARP EDGES.

BASIC DIMENSIONS	2 PLACE DECIMALS	3 PLACE DECIMALS
UP TO 6	±.02	±.005
ABOVE 6 TO 24	±.03	±.010
ABOVE 24	±.06	±.015

ANGULAR DIMENSIONS 1/2

USED ON MODEL: 1S104

DRAWN: J.H.REED DATE 28 APR 1995
CHKD: J.H.REED DATE 9 MAY 1995
MECH: J.MAGINN DATE 8 OCT 95
ELEC: F.SCHIRK DATE 6 OCT 95

AMPLIFIER RESEARCH

PWB ASSY
1 WATT AMP

DWG. NO. 1007472

SCALE: NONE SHEET 1 OF 1 REV. A

AMPLIFIER RESEARCH

14:18:19 17 SEP 1996 * * * SINGLE LEVEL BILL OF MATERIAL LISTING * * * REPORT: E0056 PAGE: 1

BILL NO: 1007472-501 REV: B U/M: EA DRAWING NO: ARC-C\1007472

PWB ASSY,1 WATT AMP

SEQ	PART NUMBER	REV	DESCRIPTION	U/M	QUANTITY-PER	DRAWING NUMBER	REF-DSGN
0010	1007503	-	SCHEM,1 WATT AMP	EA	REF	ARC-C\1007503	
0400	27099		CAPR,FEED-THRU,FILT,2500PF,500V	EA	8.000	MET\51-719-011	C1 ,C2 C3 ,C4 C5 ,C6 C7 ,C8
0410	27039		CAPR,CHIP,CER,1000pF,10%,50V	EA	17.000	ATC\700B102MCA50X	C9 ,C10 C11 ,C12 C13 ,C14 C15 ,C16 C17 ,C18 C19 ,C20 C21 ,C22 C23 ,C24 C25
1500	41185	-	CONN,SMA,ST PNL JACK,4 HOLE FLANGE MOUNT	EA	2.000	MOS\2052-1901-02	J1 ,J2
1800	1007507-102	-	INDUCTOR,AIR WOUND,.050ID,34GA,5T	EA	7.000	ARC-B\1007507	L1 ,L2 L4 ,L5 L6 ,L7 L8
1810	66047		WIRE,BUSS,TINNED COPPER,22 AWG	IN	A/R	ALP\9022	L3
2500	1000034-176		XSTR,RF,LOW NOISE,GaAsFET	EA	1.000	ARC-A\1000034	Q1
2510	1000034-179		XSTR,RF,MED PWR,GaAsFET	EA	1.000	ARC-A\1000034	Q2
2530	1000034-177		XSTR,RF,MED PWR,GaAsFET	EA	1.000	ARC-A\1000034	Q4
2530	1000034-178		XSTR,RF,MED PWR,GaAsFET	EA	1.000	ARC-A\1000034	Q3
2700	55511-2200J		RES,FXD,CARBON COMP,220,5%,1/8W	EA	2.000	A-B\BB2215	R1 ,R2
2710	55511-1500J		RES,FXD,CARBON COMP,150,5%,1/8W	EA	1.000	A-B\BB1515	R3
2720	55511-1800J		RES,FXD,CARBON COMP,180,5%,1/8W	EA	1.000	A-B\BB1815	R4
5000	1007474-101	A	PWB,1 WATT AMP	EA	1.000	ARC-B\1007474	1
5010	1007431-101	C	HSG,1 WATT AMP	EA	1.000	ARC-D\1007431	2
5020	1007432-101	-	COVER,1 WATT AMP	EA	1.000	ARC-B\1007432	3
5030	11145		SCREW,MACH,FIL HD,SLOTTED,0-80 X .25	EA	6.000		4

BILL NO: 1007472-501 REV: B U/M: EA DRAWING NO: ARC-C\1007472
PWB ASSY,1 WATT AMP

SEQ	PART NUMBER	REV	D E S C R I P T I O N	U/M	QUANTITY-PER	DRAWING NUMBER	REF-DSGN
5050	11010		SCREW,MACH,PAN HD,CROSS-REC,S/S,4-40 X .25	EA	30.000	\MS51957-13	6
5060	12047		WASH,LOCK,SPLIT,S/S,#4	EA	30.000	\MS35338-135	7
5070	12010		WASH,FLAT,S/S,#4,.250 OD X .125 ID X .022 THK	EA	16.000	\MS15795-803	8
5080	11008		SCREW,MACH FIL HD,SLOTTED,S/S,3-56 X .25	EA	8.000	PCI\AN501-D3-4	9
5090	66054		WIRE,MAGNET,SOLDERABLE,28 AWG,RED	IN	A/R		10
5100	1000643-612	C	CORE,FERRITE,TOROID,3E2A	EA	2.000	ARC\1000643	11
5110	1007532-101	A	SHIELD,RF AMP	EA	2.000	ARC-C\1007532	12
5120	77065		SEALANT,RTV,FLUOROSILE	EA	A/R	G-E\730 RTV	13
5130	1000643-401	C	CORE,FERRITE,BEAD	EA	1.000	ARC\1000643	14
5140	69101		LUG,SOLDER,BENT TONGUE,3/4 L,3/8 OD,1/4 STUD	EA	1.000	HHS\1496	15
5150	69332		FOAM,CONDUCTIVE	IN	A/R	MMM\2802	16

ECN	DATE	REV
REL	19 JUN 95	-
7990	07SEP95	A

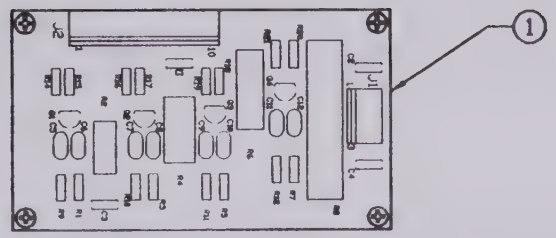

QTY. REQD.	ITEM	PART NO.	DESCRIPTION	MARK	FIN	MATL
		PARTS LIST				

UNLESS OTHERWISE SPECIFIED
DO NOT SCALE DRAWING
DIMENSIONS ARE IN INCHES AND INCLUDE PLATING THICKNESS
ALL THREADS ARE UNIFIED NATIONAL SERIES, CLASS 2
REMOVE ALL BURRS AND SHARP EDGES

BASIC DIMENSIONS	2 PLACE DECIMALS	3 PLACE DECIMALS
UP TO 6	±.02	±.005
ABOVE 6 TO 24	±.03	±.010
ABOVE 24	±.06	±.015

ANGULAR DIMENSIONS 1/2

USED ON MODEL
10S1G4
5S1G4
1S1G4

DRAWN J.H.REED DATE 11 APR 95
CHKD J.H.REED DATE 1 JUNE 95
MECH J.MAGINN DATE 19 JUNE 95
ELEC F.SCHIRK DATE 19 JUNE 95

AMPLIFIER RESEARCH

PWB,ASSY
BIAS CONTROL BD.

DWG. NO. 1007504

SCALE NONE | SHEET 1 OF 1 | REV. A

BILL NO: 1007504-501 REV: A U/M: EA DRAWING NO: ARC-B\1007504
PWB ASSY,BIAS CTRL,1 WATT AMP

SEQ	PART NUMBER	REV	DESCRIPTION	U/M	QUANTITY-PER	DRAWING NUMBER	REF-DSGN
0010	1007503	-	SCHEM,1 WATT AMP	EA	REF	ARC-C\1007503	
0400	27236		CAPR,FXD,DIP SPACED CER,.1UF,50VDC	EA	4.000	AVX\MD015C104MAA	C1 ,C2 C3 ,C4
0410	27179		CAPR,CER,1000pF,1000V,10%,CHAR Z5F	EA	4.000	NIC\NCD102K1KVY5F	C5 ,C7 C9 ,C11
1500	41082		CONN,STR,3 PIN	EA	1.000	PNT\MLSS156-3	J1
1510	41084		CONN,LOCKING HEADER,STR,10 PIN,SQR POSTS	EA	1.000	PNT\MLSS156-10-L	J2
2500	2N3906		XSTR,SWNG,PNP,40V,0.2A,1W	EA	4.000	ARE\2N3906	Q1 ,Q2 Q3 ,Q4
2700	55612-3901J		RES,FXD,METAL FILM,3.9K,5%,1/4-1/2W	EA	4.000	TRW\GP55-3901+/-5%	R1 ,R14 R15 ,R17
2710	55514-3300J		RES,FXD,CARBON COMP,330,5%,1W	EA	1.000		R2
2720	55612-1801J		RES,FXD,METAL FILM,1.8K,5%,1/4-1/2W	EA	2.000	TRW\GP55-1801+/-5%	R3 ,R5
2730	55515-1000J		RES,FXD,CARBON COMP,100,5%,2W	EA	1.000		R4
2740	55718-50R0J		RES,FXD,WW,50,5%,5W	EA	1.000	OHM\95J50R	R6
2750	55612-4701J		RES,FXD,METAL FILM,4.7K,5%,1/4-1/2W	EA	3.000	TRW\GP55-4701+/-5%	R7 ,R19 R21
2760	55724-25R0J		RES,FXD,WW,25,5%,11W	EA	1.000	OHM\90J25R	R8
2770	55612-1101J		RES,FXD,METAL FILM,1.1K,5%,1/4-1/2W	EA	2.000	TRW\GP55-1101+/-5%	R9 ,R10
2780	55612-1201J		RES,FXD,METAL FILM,1.2K,5%,1/4-1/2W	EA	1.000	TRW\GP55 1.2K 5%	R11
2790	55612-3301J		RES,FXD,METAL FILM,3.3K,5%,1/4-1/2W	EA	1.000	TRW\GP55-3301+/-5%	R12
2800	55612-2701J		RES,FXD,METAL FILM,2.7K,5%,1/4-1/2W	EA	3.000	TRW\GP55-2701+/-5%	R16 ,R18 R20
5000	1007505-101	A	PWB,BIAS CTRL,1 WATT AMP	EA	1.000	ARC-B\1007505	1

ECN	DATE	REV
-	27JUL95	1
-	15SEP95	2
REL	27SEP95	-

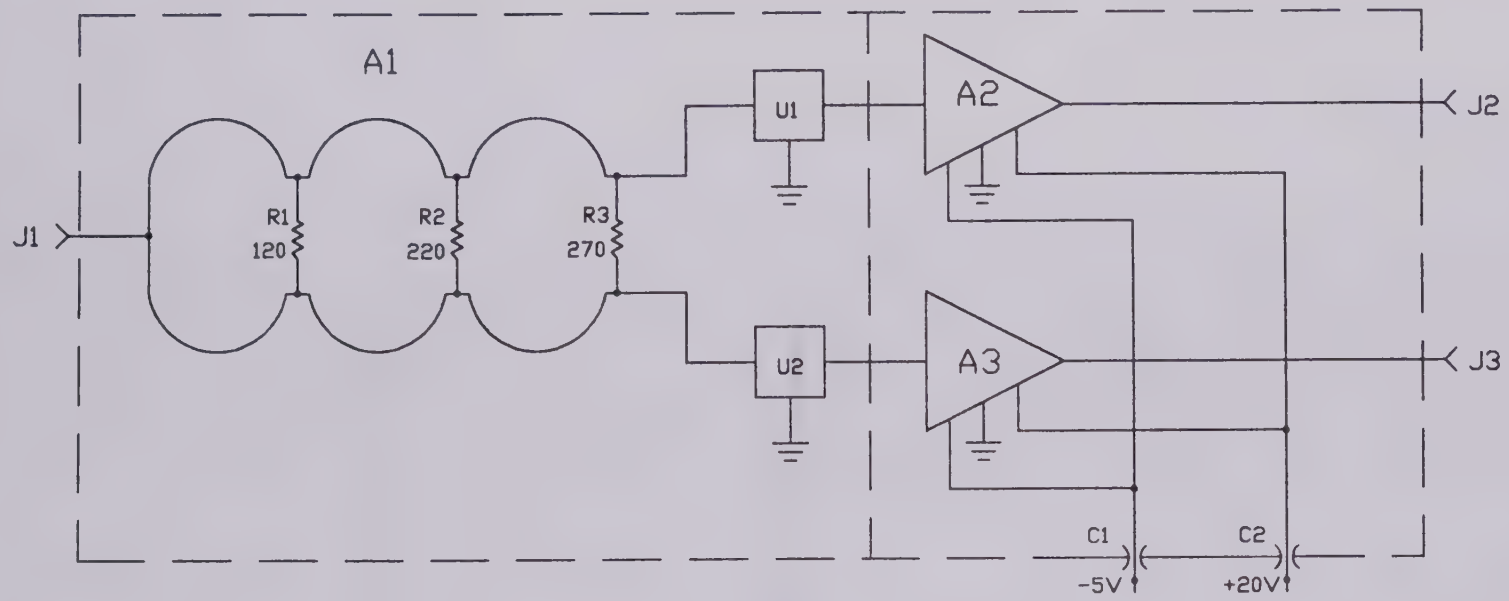

QTY. REQD.	ITEM	PART NO.	DESCRIPTION	MARK	FIN	MATL
		PARTS LIST				

UNLESS OTHERWISE SPECIFIED
DO NOT SCALE DRAWING
DIMENSIONS ARE IN INCHES AND INCLUDE PLATING THICKNESS
ALL THREADS ARE UNIFIED NATIONAL SERIES, CLASS 2
REMOVE ALL BURRS AND SHARP EDGES

BASIC DIMENSIONS	2 PLACE DECIMALS	3 PLACE DECIMALS
UP TO 6	±.02	±.005
ABOVE 6 TO 24	±.03	±.010
ABOVE 24	±.06	±.015
ANGULAR DIMENSIONS 1/2°		

10S1G4
USED ON MODEL

DRAWN J.H.REED DATE 27 JUL 95
CHKD J.H.REED DATE 29 AUG 95
MECH DATE
ELEC DATE

AMPLIFIER RESEARCH

SCHEMATIC
2 WAY SPLIT/DRIVER

DWG. NO. 1007369

SCALE NONE | SHEET 1 OF 1 | REV. —

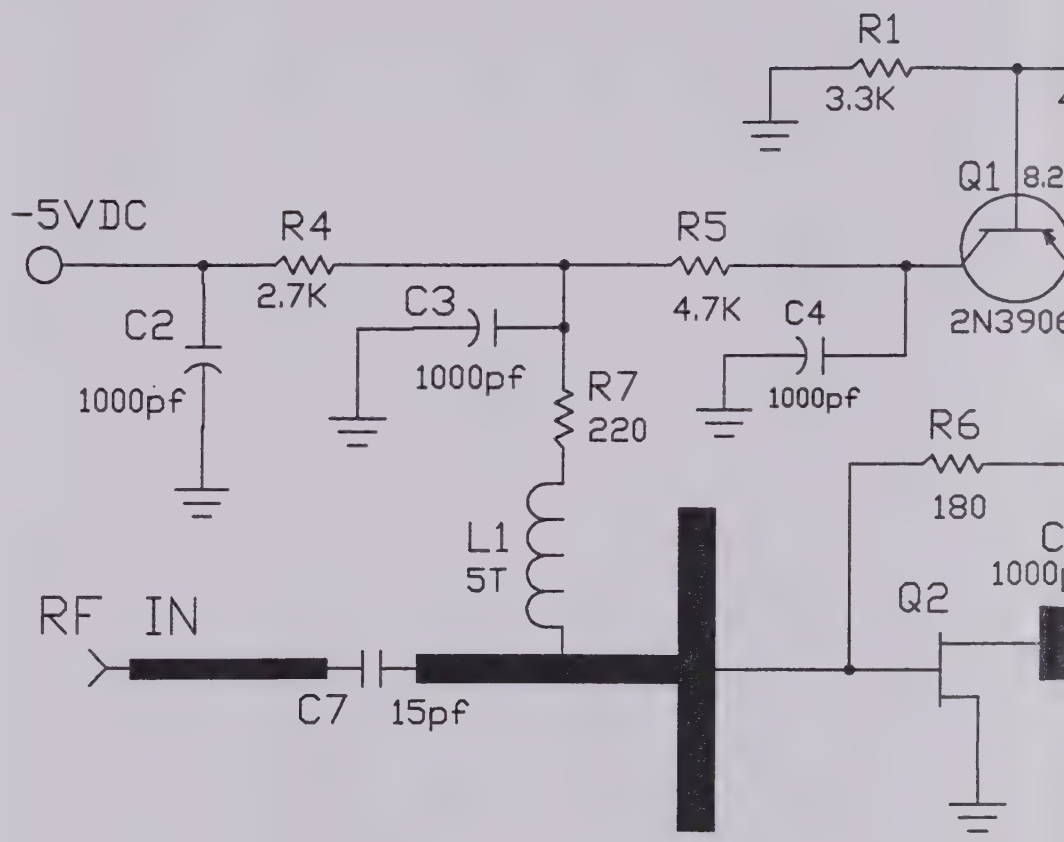

NOTE:

VOLTAGE READINGS TAKEN WITHOUT RF SIGNAL INPUT.

REFERENCE DESIGNATION TA			
LAST DESIGNATION USED			
L2	Q2	C8	R
DESIGNATIONS NOT USED			

ECN	DATE	REV
–	20JUN95	1
REL	6OCT95	–

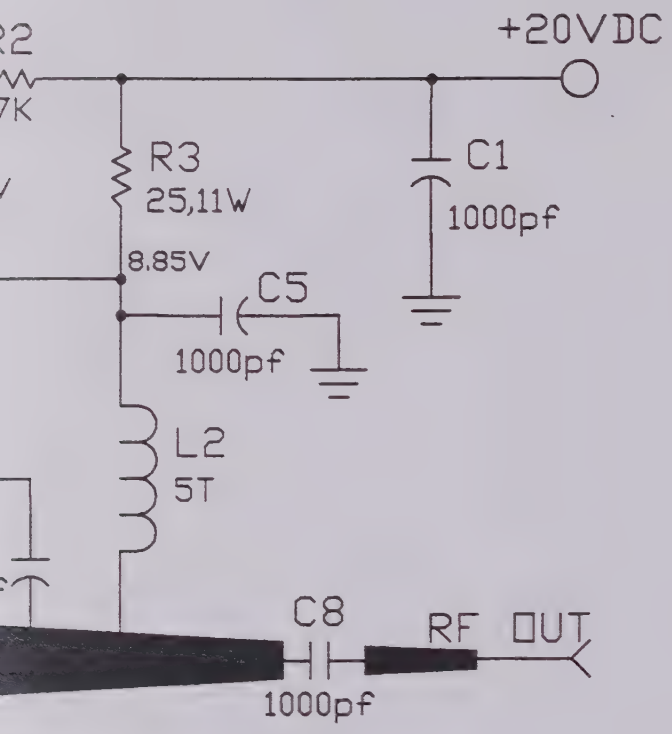

QTY. REQD.	ITEM	PART NO.	DESCRIPTION	MARK	FIN	MATL
		PARTS LIST				

UNLESS OTHERWISE SPECIFIED
DO NOT SCALE DRAWING
DIMENSIONS ARE IN INCHES AND INCLUDE PLATING THICKNESS
ALL THREADS ARE UNIFIED NATIONAL SERIES, CLASS 2
REMOVE ALL BURRS AND SHARP EDGES

BASIC DIMENSIONS	2 PLACE DECIMALS	3 PLACE DECIMALS
UP TO 6	±.02	±.005
ABOVE 6 TO 24	±.03	±.010
ABOVE 24	±.06	±.015

ANGULAR DIMENSIONS 1/2°

5S1G4
USED ON MODEL

DRAWN J.H.REED
DATE 28 JUNE,1995
CHKD J.H.REED
DATE 5 JULY,1995
MECH
DATE
ELEC
DATE

AMPLIFIER RESEARCH

SCHEMATIC
OUTPUT STAGE

DWG. NO. 1007547

SCALE NONE | SHEET 1 OF 1 | REV. —

ECN	DATE	REV
—	[illegible]	1
[illegible]	[illegible]	—
[illegible]	[illegible]	A
[illegible]	[illegible]	B

DETAIL "A"
TYP 2 PLACES

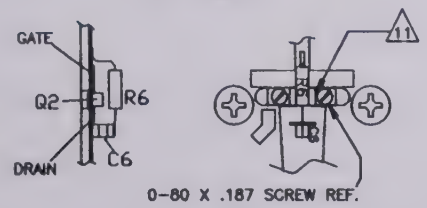

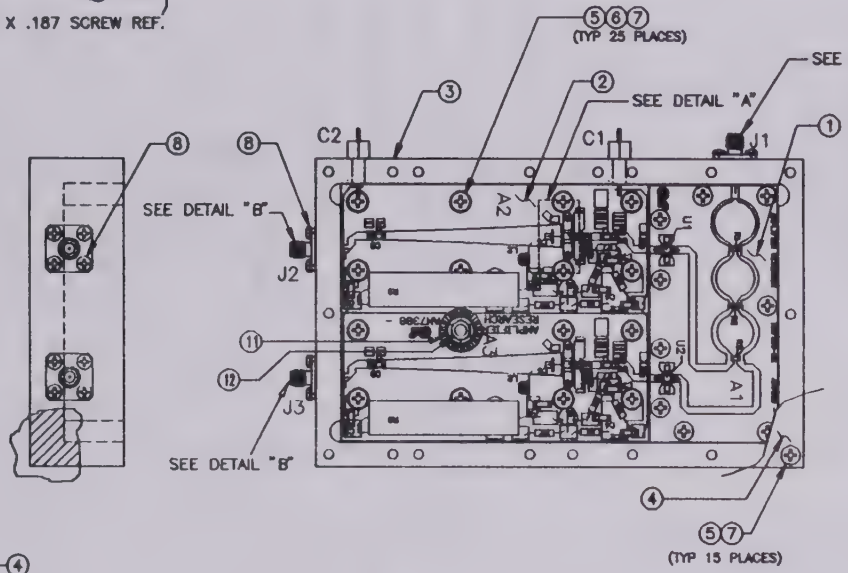

ASSEMBLY PROCEDURE
DRIVER AMPLIFIER

1) INSTALL 2 UP AMPLIFIER P.C. BOARD INTO HOUSING. CENTER THE CUT OUTS FOR THE FET'S OVER THE 0-80 FET MOUNTING SCREWS.(A2,A3).
2) INSTALL THE A1 2-WAY SPLITTER P.C. BOARD.
3) INSTALL RESISTORS R1, R2 AND R3 ONTO THE A1 SPLITTER P.C. BOARD.
4) INSTALL ATTENUATORS U1 AND U2 ONTO THE A1 SPLITTER P.C. BOARD.
5) INSTALL JUMPERS BETWEEN OUTPUTS OF THE A1 SPLITTER TO THE INPUTS OF A2 AND A3.
6) INSTALL L1 AND L2 OF A2 AND A3.
7) INSTALL R1, R2, R3, R4 AND R5 OF A2 AND A3.
NOTE: MOUNT R3 (11 WATT RESISTORS) APPROXIMATELY 1/8: ABOVE THE P.C. BOARD.
8) INSTALL Q1 (2N3906) OF A2 AND A3
9) INSTALL CERAMIC CHIP CAPS C1, C2, C3, C4, C5, C7 AND C8 OF A2 AND A3.
NOTE: THE FET INSTALLATION MUST BE DONE AT A STATIC APPROVED WORK STATION. PERSONS HANDLING AND INSTALLING THE FET'S MUST BE FAMILIAR WITH GaAs FET HANDLING PROCEDURES. THE GaAs FET CAN BE DESTROYED ELECTRICALLY AND MECHANICALLY.
10) FET PREPARATION
NOTE: THE FET USED IS FRAGILE AND CAN BE BROKEN WHEN CUTTING THE LEADS. DO NOT PUT EXCESSIVE STRAIN ON THE LEAD TO BODY CONNECTION.
A) CUT THE GATE TO APPROXIMATELY 0.075" LONG AT AN ANGLE SO AS NOT TO LOSE LEAD IDENTIFICATION.
B) CUT THE DRAIN LEAD PERPENDICULAR TO APPROXIMATELY 0.075" LONG.
NOTE: DO NOT PUSH THE GATE OR DRAIN LEAD DOWN TO THE P.C. BOARD WHEN INSTALLING THE FET OR DURING THE FOLLOWING OPERATIONS. USE SOLDER TO FILL THE AREA BETWEEN THE LEAD AND THE P.C. BOARD.
11) INSTALL GaAs FET Q2 INTO A2 AND A3.
12) INSTALL FEEDBACK CAP C6 INTO A2 AND A3.
13) INSTALL FEEDBACK RESISTOR R6 INTO A2 AND A3.
14) INSTALL JUMPERS FROM FEEDTHRU:

FROM	TO
C1	-5V INPUT ON A2 AND A3
C2	+20V INPUT ON A2 AND A3

15) INSTALL CONNECTOR J1, J2 AND J3 INTO THE HOUSING.
16) PLACE ITEMS 9,AND 10 ON REAR SIDE OF COVER AS SHOWN.
17) INSTALL ITEMS 4,5, AND 7 TO CASE.

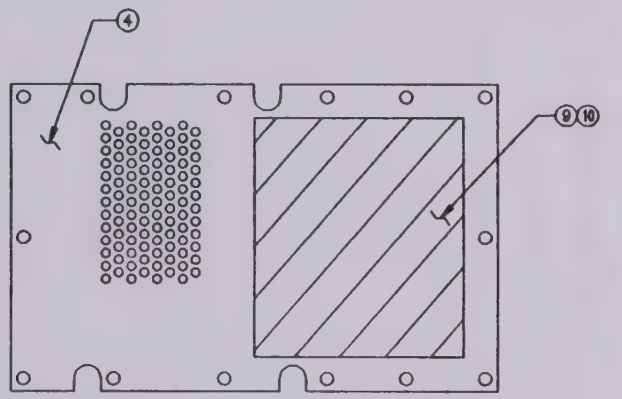

BOTTOM VIEW - COVER

DETAIL "B"

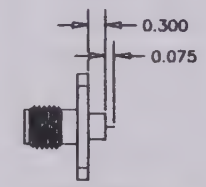

MODIFY PART J1,J2, AND J3 PER ABOVE DWG. PRIOR TO ASSEMBLY.
CUT TEFLON INSULATOR 0.300 INCH FROM BACK OF CONNECTOR, THEN CUT CENTER CONDUCTOR 0.075 INCH FROM TEFLON END.

QTY. REQD.	ITEM	PART NO.	DESCRIPTION	MARK	FIN	MATL
		PARTS LIST				

UNLESS OTHERWISE SPECIFIED DO NOT SCALE DRAWING. REMOVE ALL BURRS AND SHARP EDGES. ALL DIMENSIONS ARE LIMITED BILATERAL SERIES, CLASS 2.

BASIC DIMENSIONS	2 PLACE DECIMALS	3 PLACE DECIMALS
UP TO 6	±.02	±.005
ABOVE 6 TO 24	±.03	±.010
ABOVE 24	±.05	±.010

ANGULAR DIMENSIONS 1/2°

DRAWN J.H.REED DATE 28 JULY 1990
CHKD J.H.REED DATE 8 AUG. 1990
MECH J.MAGINN DATE 20 NOV 85
ELEC F.SCHINK DATE 20 NOV 85

AMPLIFIER RESEARCH

ASSEMBLY DRIVER AMP

DWG. NO. 1007521

SCALE 1/1 SHEET 1 OF 1 REV B

105924
USED ON MODEL

AMPLIFIER RESEARCH

14:18:20 17 SEP 1996 *** SINGLE LEVEL BILL OF MATERIAL LISTING *** REPORT: E0056 PAGE: 1

BILL NO: 1007521-501 REV: C U/M: EA DRAWING NO: ARC-C\1007521
PWB ASSY,DRIVER AMP

SEQ	PART NUMBER	REV	DESCRIPTION	U/M	QUANTITY-PER	DRAWING NUMBER	REF-DSGN
0010	1007369	-	SCHEM DIAG,DRIVER	EA	REF	ARC-C\1007369	
0020	1007547	-	SCHEM DIAG,OUTPUT STAGE	EA	REF	ARC-B\1007547	
0100	1007545-501	C	COMPNT KIT	EA	2.000		A2 ,A3
0400	27099		CAPR,FEED-THRU,FILT,2500PF,500V	EA	2.000	MET\51-719-011	C1 ,C2
1500	41185	-	CONN,SMA,ST PNL JACK,4 HOLE FLANGE MOUNT	EA	3.000	MOS\2052-1901-02	J1 ,J2 J3
2700	55647-1200J		RES,FXD,CHIP,120,5%,1/4W	EA	1.000	EMC\CR17-120,5	R1
2710	55647-2200J		RES,FXD,CHIP,220,5%,1/4W	EA	1.000	EMC\CR17-220,5	R2
2720	55647-2700J		RES,FXD,CHIP,270,5%,1/4W	EA	1.000	EMC\CR17-270,5	R3
3700	25055	-	ATTEN,FXD,4dB,1W,70 MIL PKG	EA	2.000	MIN\PAT-4	U1 ,U2
5000	1007389-101	-	PWB,SPLITTER 2 WAY	EA	1.000	ARC-B\1007389	1
5010	1007388-101	A	PWB,DRIVER 2 WAY	EA	1.000	ARC-B\1007388	2
5020	1007411-101	C	HSG,DRIVER	EA	1.000	ARC-C\1007411	3
5030	1007680-101	A	COVER,DRIVER	EA	1.000	ARC-B\1007680	4
5040	11010		SCREW,MACH,PAN HD,CROSS-REC,S/S,4-40 X .25	EA	39.000	\MS51957-13	5
5050	12010		WASH,FLAT,S/S,#4,.250 OD X .125 ID X .022 THK	EA	25.000	\MS15795-803	6
5060	12047		WASH,LOCK,SPLIT,S/S,#4	EA	39.000	\MS35338-135	7
5070	11008		SCREW,MACH FIL HD,SLOTTED,S/S,3-56 X .25	EA	12.000	PCI\AN501-D3-4	8
5080	69332		FOAM,CONDUCTIVE	IN	A/R	MMM\2802	9
5090	77065		SEALANT,RTV,FLUOROSILE	EA	A/R	G-E\730 RTV	10
5100	14049	-	SPACER,HEX,THD,M-F,A,1/4 HEX,X.625 LG X 4-40	EA	1.000	KEY\8402	11
5110	1000643-608	C	CORE,FERRITE,TOROID,Q2	EA	2.000	ARC\1000643	12

AMPLIFIER RESEARCH

14:18:21 17 SEP 1996 * * * SINGLE LEVEL BILL OF MATERIAL LISTING * * * REPORT: E0056 PAGE: 1

BILL NO: 1007545-501 REV: C U/M: EA DRAWING NO:
COMPNT KIT

SEQ	PART NUMBER	REV	D E S C R I P T I O N	U/M	QUANTITY-PER	DRAWING NUMBER	REF-DSGN
0010	1007547	-	SCHEM DIAG,OUTPUT STAGE	EA	REF	ARC-B\1007547	
0400	27039		CAPR,CHIP,CER,1000pF,10%,50V	EA	7.000	ATC\700B102MCA50X	C1 ,C2 C3 ,C4 C5 ,C6 C8
0410	27031		CAPR,CHIP,15pF,20%,500V	EA	1.000	DIL\C17AH150MATXL	C7
1800	1007507-102	-	INDUCTOR,AIR WOUND,.050ID,34GA,5T	EA	2.000	ARC-B\1007507	L1 ,L2
2500	2N3906		XSTR,SWNG,PNP,40V,0.2A,1W	EA	1.000	ARE\2N3906	Q1
2510	1000034-181		XSTR,RF,HI PWR,FET	EA	1.000	ARC-A\1000034	Q2
2700	55612-3301J		RES,FXD,METAL FILM,3.3K,5%,1/4-1/2W	EA	1.000	TRW\GP55-3301+/-5%	R1
2710	55612-4701J		RES,FXD,METAL FILM,4.7K,5%,1/4-1/2W	EA	2.000	TRW\GP55-4701+/-5%	R2 ,R5
2720	55724-25R0J		RES,FXD,WW,25,5%,11W	EA	1.000	OHM\90J25R	R3
2730	55612-2701J		RES,FXD,METAL FILM,2.7K,5%,1/4-1/2W	EA	1.000	TRW\GP55-2701+/-5%	R4
2740	55511-1800J		RES,FXD,CARBON COMP,180,5%,1/8W	EA	1.000	A-B\BB1815	R6
2750	55511-2200J		RES,FXD,CARBON COMP,220,5%,1/8W	EA	1.000	A-B\BB2215	R7
7100	11145		SCREW,MACH,FIL HD,SLOTTED,0-80 X .25	EA	2.000		

ECN	DATE	REV
—	25AUG95	1
—	26SEP95	2
REL	20CT95	—
8103	10NOV95	A

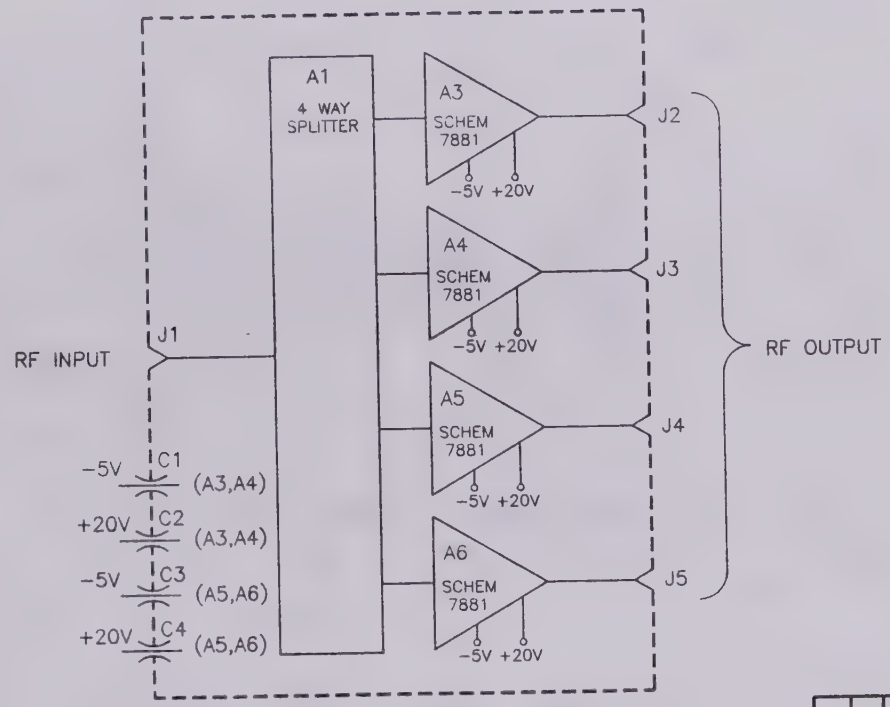

QTY. REQD.	ITEM	PART NO.	DESCRIPTION	MARK	FIN	MATL
		PARTS LIST				

UNLESS OTHERWISE SPECIFIED
DO NOT SCALE DRAWING
DIMENSIONS ARE IN INCHES AND INCLUDE PLATING THICKNESS
ALL THREADS ARE UNIFIED NATIONAL SERIES, CLASS 2
REMOVE ALL BURRS AND SHARP EDGES

BASIC DIMENSIONS	2 PLACE DECIMALS	3 PLACE DECIMALS
UP TO 6	± .02	± .005
ABOVE 6 TO 24	± .03	± .010
ABOVE 24	± .06	± .015

ANGULAR DIMENSIONS 1/2°

10S1G4
USED ON MODEL

DRAWN C. BICKELMAN DATE 25 AUG 95
CHKD C. BICKELMAN DATE 25 AUG 95
MECH J.MAGIN DATE 2 SEP 95
ELEC F.SCHIRK DATE 2 OCT 95

AMPLIFIER RESEARCH

SCHEM DIAG
5 WATT AMP

DWG. NO. 1007407

SCALE 1/1 | SHEET 1 OF 1 | REV. A

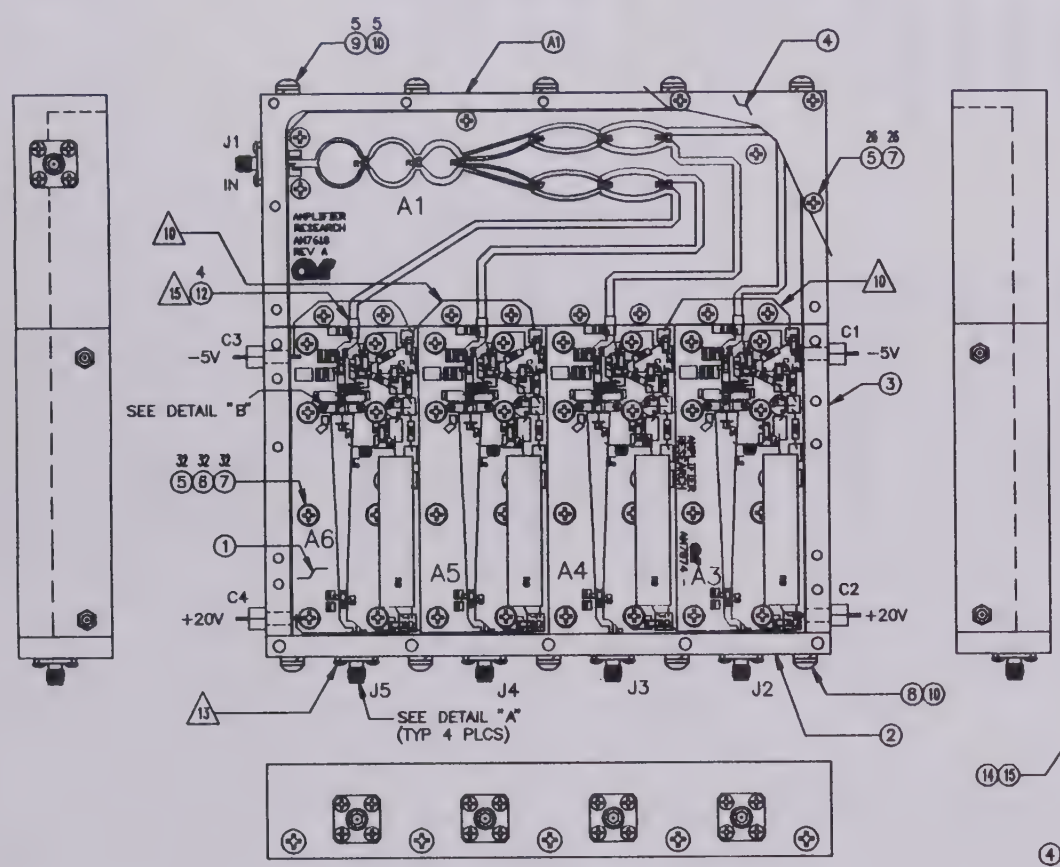

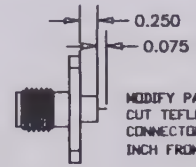

DETAIL "A"

MODIFY PARTS J2,J3,J4,J5 PER DWG,PRIOR TO ASSY. CUT TEFLON INSULATOR 0.250 INCH FROM BACK OF CONNECTOR, THEN CUT CENTER CONDUCTOR 0.075 INCH FROM TEFLON END.

BOTTOM VIEW – COVER

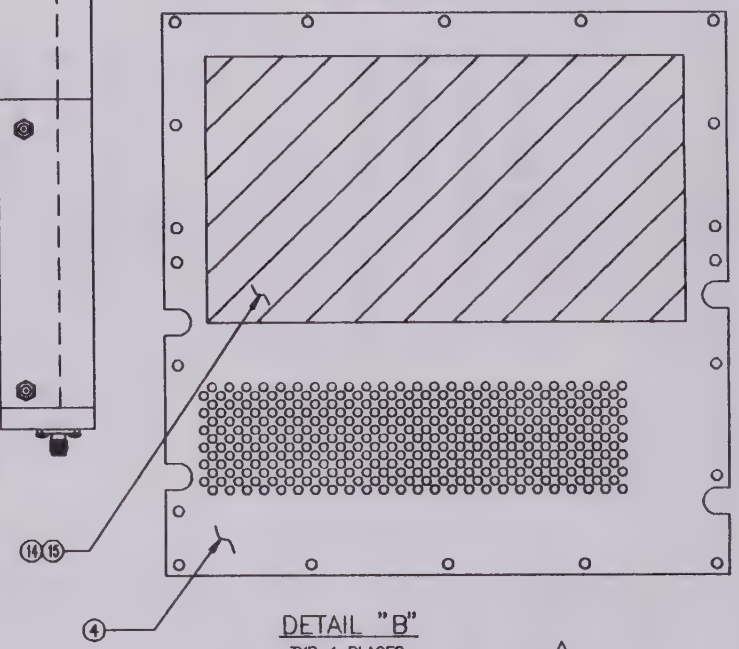

DETAIL "B"

TYP 4 PLACES

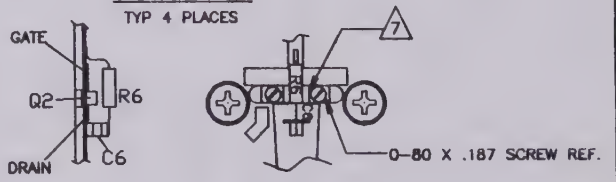

ASSEMBLY PROCEDURE
10 WATT AMPLIFIER

1) INSTALL 4 UP AMPLIFIER P.C. BOARD INTO HOUSING. CENTER THE CUT OUTS FOR THE FET'S OVER THE 0-80 FET MOUNTING SCREWS.
2) INSTALL L1 AND L2 OF A3, A4, A5 AND A6.
3) INSTALL R1, R2, R3, R4 AND R5 OF A3, A4, A5 AND A6
   NOTE: MOUNT R3 (11 WATT RESISTOR) APPROXIMATELY 1/8" ABOVE THE P.C. BOARD.
4) INSTALL Q1 (2N3906) OF A3, A4, A5 AND A6.
5) INSTALL CERAMIC CHIP CAPS C1, C2, C3, C4, C5, C7 AND C8 OF A3, A4, A5 AND A6.
   NOTE: THE FET INSTALLATION MUST BE DONE AT A STATIC APPROVED WORK STATION. PERSONS HANDLING AND INSTALLING THE FET'S MUST BE FAMILIAR WITH GaAs FET HANDLING PROCEDURES. THE GaAs GET CAN BE DESTROYED ELECTRICALLY AND MECHANICALLY.
6) FET PREPARATION
   NOTE: THE FET USED IS FRAGILE AND CAN BE BROKEN WHEN CUTTING THE LEADS, DO NOT PUT EXCESSIVE STRAIN ON THE LEAD TO BODY CONNECTION.
   A) CUT THE GATE TO APPROXIMATELY 0.075" LONG AT AN ANGLE SO AS NOT TO LOSE LEAD IDENTIFICATION.
   B) CUT THE DRAIN LEAD PERPENDICULAR TO APPROXIMATELY 0.075" LONG.
   NOTE: DO NOT PUSH THE GATE OR DRAIN LEAD DOWN TO THE P.C. BOARD WHEN INSTALLING THE FET OR DURING THE FOLLOWING OPERATIONS. USE SOLDER TO FILL THE AREA BETWEEN THE LEAD AND THE P.C. BOARD.
7) INSTALL GaAs FET Q2 INTO A3, A4, A5 AND A6.
8) INSTALL FEEDBACK CAP C8 INTO A3, A4, A5 AND A6 BOARDS.
9) INSTALL FEEDBACK RESISTOR R6 INTO A3, A4, A5 AND A6.
10) INSTALL JUMPERS FROM FEEDTHRU:

FROM	TO
C1	-5V INPUT ON A3 AND A4
C3	-5V INPUT ON A5 AND A6
C2	+20V INPUT ON A3 AND A4
C4	+20V INPUT ON A5 AND A6

11) INSTALL THE COMBINER PLATE ONTO THE HOUSING.
12) INSTALL CONNECTOR J2,J3,J4,AND J5 INTO THE HOUSING.
13) INSTALL JUMPERS FROM OUTPUTS OF A3, A4, A5 AND A6 TO INPUTS OF THE A2 COMBINER.
14) INSTALL THE SPLITTER ASSEMBLY ONTO THE RF AMPLIFIER.
15) INSTALL JUMPERS FROM THE OUTPUTS OF THE SPLITTER TO THE INPUTS OF A3, A4, A5 AND A6.

QTY. REQD.	ITEM	PART NO.	DESCRIPTION	MARK	FIN	MATL
		PARTS LIST				

UNLESS OTHERWISE SPECIFIED DO NOT SCALE DRAWING DIMENSIONS ARE IN INCHES AND INCLUDE PLATING THICKNESS ALL THREADS ARE UNIFIED NATIONAL SERIES, CLASS 2 REMOVE ALL BURRS AND SHARP EDGES

BASIC DIMENSIONS	2 PLACE DECIMALS	3 PLACE DECIMALS
UP TO 6	±.02	±.005
ABOVE 6 TO 24	±.03	±.010
ABOVE 24	±.06	±.015

ANGULAR DIMENSIONS 1/2°

DRAWN J.H.REED DATE 28 JULY 1986
CHKD J.H.REED DATE 8 AUG. 1986
MECH J.MAGINN DATE 20 NOV 95
ELEC F.SCHIRK DATE 20 NOV 95

AMPLIFIER RESEARCH

ASSEMBLY OUTPUT AMP

DWG. NO. 1007406

SCALE 1/1 SHEET 1 OF 1 REV. B

10SK4 USED ON MODEL

AMPLIFIER RESEARCH

14:18:21 17 SEP 1996 * * * SINGLE LEVEL BILL OF MATERIAL LISTING * * * REPORT: E0056 PAGE: 1

BILL NO: 1007406-501 REV: B U/M: EA DRAWING NO: ARC-C\1007406
AMPL ASSY,FINAL

SEQ	PART NUMBER	REV	D E S C R I P T I O N	U/M	QUANTITY-PER	DRAWING NUMBER	REF-DSGN
0010	1007407	A	SCHEM DIAG,5W AMP	EA	REF	ARC-C\1007407	
0020	1007881	A	SCHEM DIAG,OUTPUT STAGE	EA	REF	ARC-B\1007881	
0100	1007617-501	-	PWB ASSY,SPLITTER	EA	1.000	ARC-C\1007617	A1
0400	27099		CAPR,FEED-THRU,FILT,2500PF,500V	EA	4.000	MET\51-719-011	C1 ,C2 C3 ,C4
1500	41185	-	CONN,SMA,ST PNL JACK,4 HOLE FLANGE MOUNT	EA	4.000	MOS\2052-1901-02	J2 ,J3 J4 ,J5
5000	1007873-501	A	COMPNT KIT	EA	4.000		A3 ,A4 A5 ,A6
5000	1007874-101	-	PWB,OUTPUT STAGE	EA	1.000	ARC-B\1007874	1
5010	1007408-101	A	PL,CONN	EA	1.000	ARC-B\1007408	2
5020	1007394-101	C	HSG,5 WATT AMP	EA	1.000	ARC-C\1007394	3
5030	1007679-101	A	COVER,5W AMP	EA	1.000	ARC-C\1007679	4
5040	11010		SCREW,MACH,PAN HD,CROSS-REC,S/S,4-40 X .25	EA	54.000	\MS51957-13	5
5050	12010		WASH,FLAT,S/S,#4,.250 OD X .125 ID X .022 THK	EA	32.000	\MS15795-803	6
5060	12047		WASH,LOCK,SPLIT,S/S,#4	EA	54.000	\MS35338-135	7
5070	11016		SCREW,MACH,PAN HD,CROSS-REC,S/S,6-32 X .38	EA	5.000	\MS51957-28	8
5080	11101		SCREW,MACH,RND,HD,SLOTTED,S/ZNC PLTG.,6-32 X 3.00"	EA	5.000		9
5090	12048		WASH,LOCK,SPLIT,S/S,#6	EA	10.000	\MS35338-136	10
5110	77102		BRASS STRIP,1/2 HARD,0.010 THK,0.250 W	FT	A/R	NAB\1/2 HD B STRAP	12
5120	11008		SCREW,MACH FIL HD,SLOTTED,S/S,3-56 X .25	EA	16.000	PCI\AN501-D3-4	13
5130	69332		FOAM,CONDUCTIVE	IN	A/R	MMM\2802	14
5140	77065		SEALANT,RTV,FLUOROSILE	EA	A/R	G-E\730 RTV	15

BILL NO: 1007873-501 REV: A U/M: EA DRAWING NO:
COMPNT KIT

SEQ	PART NUMBER	REV	D E S C R I P T I O N	U/M	QUANTITY-PER	DRAWING NUMBER	REF-DSGN
0010	1007881	A	SCHEM DIAG,OUTPUT STAGE	EA	REF	ARC-B\1007881	
0400	27039		CAPR,CHIP,CER,1000pF,10%,50V	EA	7.000	ATC\700B102MCA50X	C1 ,C2 C3 ,C4 C5 ,C6 C8
0410	27031		CAPR,CHIP,15pF,20%,500V	EA	1.000	DIL\C17AH150MATXL	C7
1800	1007507-102	-	INDUCTOR,AIR WOUND,.050ID,34GA,5T	EA	2.000	ARC-B\1007507	L1 ,L2
2500	2N3906		XSTR,SWNG,PNP,40V,0.2A,1W	EA	1.000	ARE\2N3906	Q1
2510	1000034-181		XSTR,RF,HI PWR,FET	EA	1.000	ARC-A\1000034	Q2
2700	55612-3301J		RES,FXD,METAL FILM,3.3K,5%,1/4-1/2W	EA	1.000	TRW\GP55-3301+/-5%	R1
2710	55612-3901J		RES,FXD,METAL FILM,3.9K,5%,1/4-1/2W	EA	1.000	TRW\GP55-3901+/-5%	R2
2720	55724-20R0J		RES,FXD,WW,20,5%,11W	EA	1.000	OHM\90J20R	R3
2730	55612-2701J		RES,FXD,METAL FILM,2.7K,5%,1/4-1/2W	EA	1.000	TRW\GP55-2701+/-5%	R4
2735	55612-4701J		RES,FXD,METAL FILM,4.7K,5%,1/4-1/2W	EA	1.000	TRW\GP55-4701+/-5%	R5
2740	55511-1800J		RES,FXD,CARBON COMP,180,5%,1/8W	EA	1.000	A-B\BB1815	R6
2750	55511-2200J		RES,FXD,CARBON COMP,220,5%,1/8W	EA	1.000	A-B\BB2215	R7
7100	11146		SCREW,PAN HD,SLOTTED,S/S,#0-80 X .187	EA	2.000		

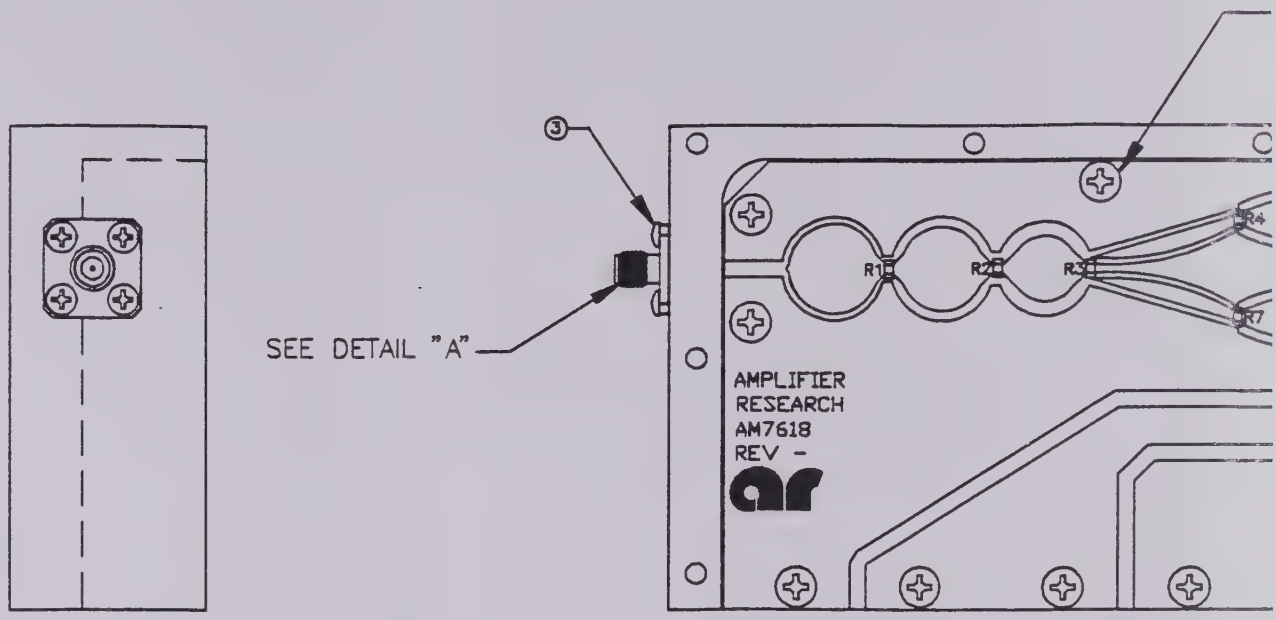

DETAIL "A"

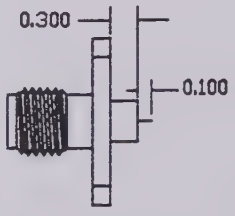

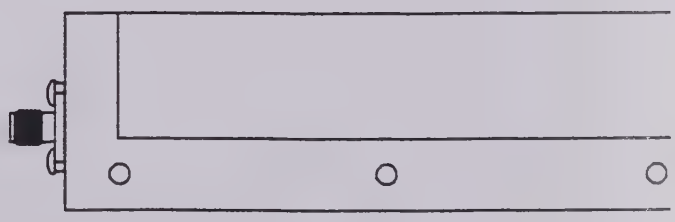

MODIFY PART J1 PER ABOVE DETAIL PRIOR TO ASSEMBLY.
CUT TEFLON INSULATOR 0.300 INCH FROM BACK OF CONNECTOR, THEN CUT CENTER CONDUCTOR 0.100 INCH FROM TEFLON END.

SPLITTER ASSEMBLY PROCEDURE

1) INSTALL P.C. BOARD INTO HOUSING.
2) MODIFY J1 TO DETAIL A DIMENSIONS.
3) INSTALL J1 INTO HOUSING, SOLDER CENTER PIN TO P.C. BOARD.

CAUTION – DO NOT MIX CHIP RESISTORS, THEY CANNOT BE MEASURED IN CIRCUIT.

4) TIN AND INSTALL RESISTORS R1, R4 AND R7.
5) TIN AND INSTALL RESISTORS R2, R5 AND R8.
6) TIN AND INSTALL RESISTORS R3, R6 AND R9.

ECN	DATE	REV
—	28JUN95	1
REL	6OCT95	—

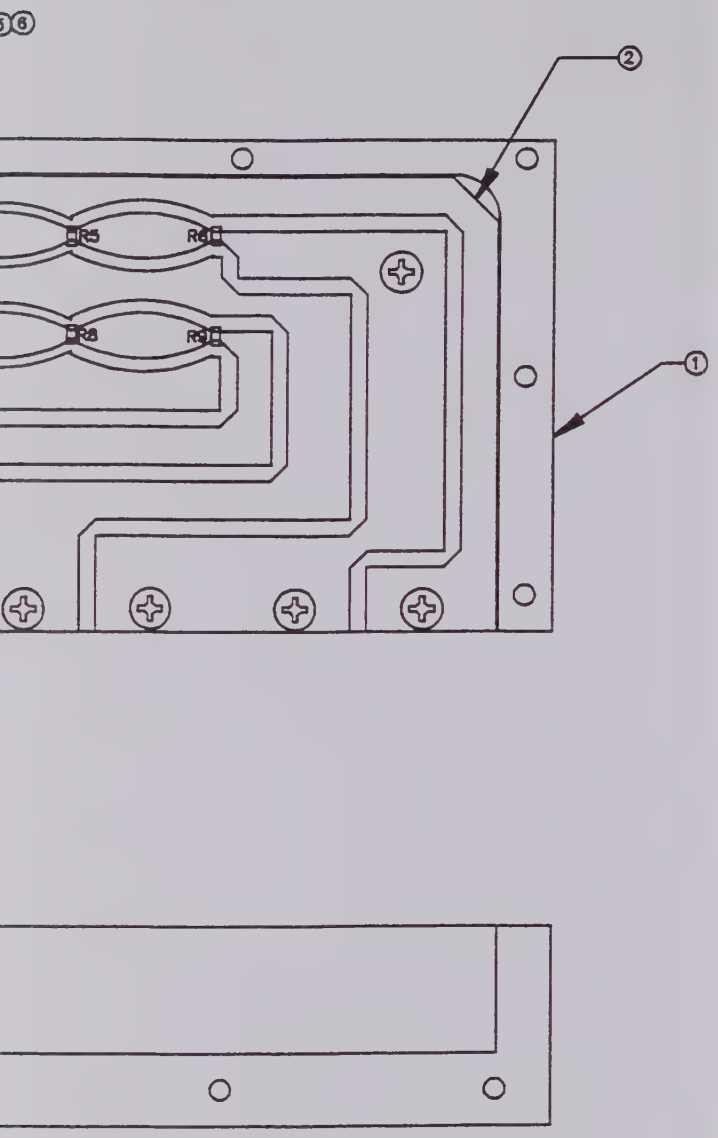

QTY. REQD.	ITEM	PART NO.	DESCRIPTION	MARK	FIN	MATL
		PARTS LIST				

UNLESS OTHERWISE SPECIFIED
DO NOT SCALE DRAWING
DIMENSIONS ARE IN INCHES AND INCLUDE PLATING THICKNESS
ALL THREADS ARE UNIFIED NATIONAL SERIES, CLASS 2
REMOVE ALL BURRS AND SHARP EDGES

BASIC DIMENSIONS	2 PLACE DECIMALS	3 PLACE DECIMALS
UP TO 6	±.02	±.005
ABOVE 6 TO 24	±.03	±.010
ABOVE 24	±.06	±.015
ANGULAR DIMENSIONS 1/2°		

5S1G4
USED ON MODEL

DRAWN J.H.REED
DATE 23 JUN 95
CHKD J.H.REED
DATE 28 JUN 95
MECH
DATE
ELEC
DATE

AMPLIFIER RESEARCH

PWB ASSY
SPLITTER

DWG. NO. 1007617

SCALE NONE | SHEET 1 OF 1 | REV. —

AMPLIFIER RESEARCH

14:18:22 17 SEP 1996 * * * SINGLE LEVEL BILL OF MATERIAL LISTING * * * REPORT: E0056 PAGE: 1

BILL NO: 1007617-501 REV: - U/M: EA DRAWING NO: ARC-C\1007617
PWB ASSY,SPLITTER

SEQ	PART NUMBER	REV	D E S C R I P T I O N	U/M	QUANTITY-PER	DRAWING NUMBER	REF-DSGN
1500	41185	-	CONN,SMA,ST PNL JACK,4 HOLE FLANGE MOUNT	EA	1.000	MOS\2052-1901-02	J1
2700	55647-1200J		RES,FXD,CHIP,120,5%,1/4W	EA	3.000	EMC\CR17-120,5	R1 ,R4 R7
2710	55647-2200J		RES,FXD,CHIP,220,5%,1/4W	EA	3.000	EMC\CR17-220,5	R2 ,R5 R8
2720	55647-2700J		RES,FXD,CHIP,270,5%,1/4W	EA	3.000	EMC\CR17-270,5	R3 ,R6 R9
5000	1007368-101	B	HSG,INPUT,5 WATT AMP	EA	1.000	ARC-D\1007368	1
5010	1007618-101	A	PWB,SPLITTER	EA	1.000	ARC-C\1007618	2
5020	11008		SCREW,MACH FIL HD,SLOTTED,S/S,3-56 X .25	EA	4.000	PCI\AN501-D3-4	3
5030	11010		SCREW,MACH,PAN HD,CROSS-REC,S/S,4-40 X .25	EA	12.000	\MS51957-13	4
5040	12047		WASH,LOCK,SPLIT,S/S,#4	EA	12.000	\MS35338-135	5
5050	12010		WASH,FLAT,S/S,#4,.250 OD X .125 ID X .022 THK	EA	12.000	\MS15795-803	6

* * * END OF REPORT E0056 - 14:18:22 17 SEP 1996 * * *

SECTION VI

RECOMMENDED SPARE PARTS

6.1 LEVEL OF MAINTENANCE

Three separate lists of parts are recommended for maintenance of the related amplifier. Each list will contain parts that will be required for repairs to be performed at a particular level of technical expertise and equipment needed to perform this level of maintenance. The three levels are:

Level 1 - Technician Level

Performed at equipment location with connectorized items. Limited to replacement of PCBs, amplifier assemblies, fuses, etc. Requires qualified technical personnel. Suggested when time must be minimized.

Level 2 - Field Service / Shop Level

Parts replacement requiring minimum adjustment or alignment. Includes PCB repair, replacement of controls, power supply components, fans, and individual RF components that would not adversely affect alignment.

Level 3 - Factory Authorized Level

Repairs that require alignment or major adjustments. To be performed in a properly instrumented laboratory by a qualified technical staff.

AMPLIFIER RESEARCH

14:22:28 17 SEP 1996 * * * SUMMARY BILL OF MATERIAL LISTING SPARE PARTS ONLY * * * REPORT: C0606 PAGE: 1

BILL NO: 1007390-501 REV: - U/M: EA DRAWING NO: ARC-D\1007390

MODEL 10S1G4,10 WATTS CW,800MHz-4.2GHz

ITM	PART NUMBER	REV	DESCRIPTION	U/M	QUANTITY-PER DRAWING NUMBER	REF-DSGN
1	33010		LED,RED/GRN,T13/4(5MM)	EA	2.000 H-P\HLMP4000-009	DS1 ,DS2
	SPARE QTY:		1 LEVEL: 2 3			
2	55901	-	RES,VAR,CP,10K,10%,1/2W	EA	1.000 CLA\RV6NAYSA103A	R1
	SPARE QTY:		1 LEVEL: 2 3			
3	57029		SW,PB,MOM,SPST(N.O.)	EA	1.000 A-S\MSPS-103C-2	S2
	SPARE QTY:		1 LEVEL: 2 3			

* * * END OF REPORT C0606 - 14:22:28 17 SEP 1996 * * *

AMPLIFIER RESEARCH

MODEL NO. 10S1G4
SERIAL NO. 19340
TESTED BY J.M.A
DATE 9-23-96

TEST DATA SHEET

FREQ. (GHz)	POWER OUTPUT @ 1dB COMPRESSION (WATTS)	POWER OUTPUT SATURATED (WATTS) @ 0dBm INPUT	HARMONIC DISTORTION @ 8 WATTS
0.8	13.9	15.1	-22 dBc
1.0	13.4	13.4	-24 dBc
1.5	14.5	14.5	-40 dBc
2.0	12.07	12.2	-28 dBc
2.5	12.0	12.5	-42 dBc
3.0	13.2	13.3	-28 dBc
3.5	12.9	13.2	-26 dBc
4.0	12.9	12.9	-38 dBc
4.2	14.4	13.2	-40 dBc

MINIMUM GAIN 43 dB @ .16 WATTS OUTPUT (at 2GHz)

FLATNESS ± 2 dB

OPEN TEST ✓ (√)

SHORT TEST ✓ (√)

STABILITY ✓ (√)

INPUT VSWR 2.0:1.0

INPUT ATTEN. RANGE ✓ (√)

LINE VOLTAGE PERFORMANCE ✓ (√)

TEST EQUIPMENT	S/N
SIGNAL GENERATOR	TEC-SG 1456
SWEEP GENERATOR	TEC-SW 1455
POWER METER	TEC-PM 1411
SPECTRUM ANALYZER	TEC-SP 1347
OSCILLOSCOPE	TEC-OS —
FIXED ATTEN. 30 dB	TEC-AT 1505
FIXED ATTEN. — dB	TEC-AT —

TEST EQUIPMENT CALIBRATED TO NATIONAL INSTITUTE OF STANDARDS & TECHNOLOGY. (NIST)

1007835
REV1195

AMPLIFIER RESEARCH
In compliance to IEC 1010-1
Safety requirements of electrical equipment for laboratory use
Annex K

ROUTINE TESTS

Model : 105164

Serial No. : 19340

Date : Sept 23 1996

Inspected By : J. Alderfer

Tests: For equipment with working voltage up to 300 V

Protective earth resistance	Limit	
Apply 25 amps between protective terminal and **ACCESSIBLE** parts. Record resistance.	≤ 0.1 ohms	.077 ohms

Mains circuit insulation	(Circle one)	(√)
Apply voltage from the mains input to chassis for a period of time greater than two (2) seconds. No arcing or breakdown should occur.	1350 VAC 1900 VDC	✓

Floating input terminals	Record Voltage	(√)
Apply 1.5 times working voltage to floating input terminals, where applicable. No arcing or breakdown should occur.	N/A	N/A

WARRANTIES: LIMITATION OF LIABILITY

JMA

SEP 23 '96

Seller warrants (i) that seller has title to the goods sold and (ii) that Amplifiers, Antennas, Directional Couplers and Field Monitoring Equipment will be free from defects in material and workmanship for a period of two (2) years from date of shipment shown on Amplifier Research invoice; other products and vacuum tubes will be free from defects in material and workmanship for a period of one (1) year. Seller's sole responsibility in fulfilling these warranties shall be to repair or replace any goods which do not conform to the foregoing warranties or, at seller's option, to give buyer credit for defective goods. The warranty is valid only when used in the country specified at time of order. Warranty service must be obtained from the repair facility designated at that time. If warranty service is not available in the country where the equipment is to be used then it must be returned to Amplifier Research. Warranty service will be provided only for defective goods which are returned within the warranty period, freight costs prepaid to Amplifier Research or its designated repair facility.

There are no other warranties, express or implied, including any warranty of merchantability or fitness. Seller shall not be responsible for any incidental or consequential damages arising from any breach of warranty.

No person other than an officer of Amplifier Research Corporation, has any authority to bind seller to any affirmation, representation or warranty except as specifically included in the preceding terms and conditions.

REV1194

www.manualsplus.com
1030455